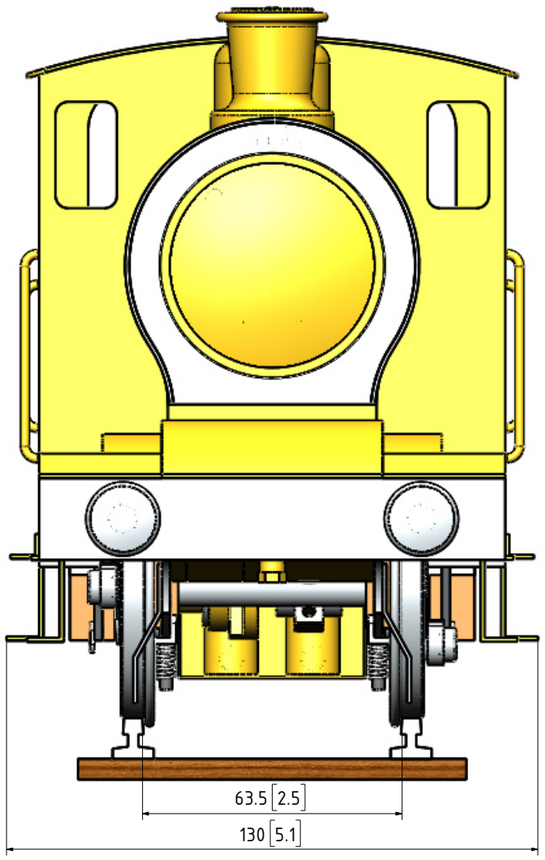

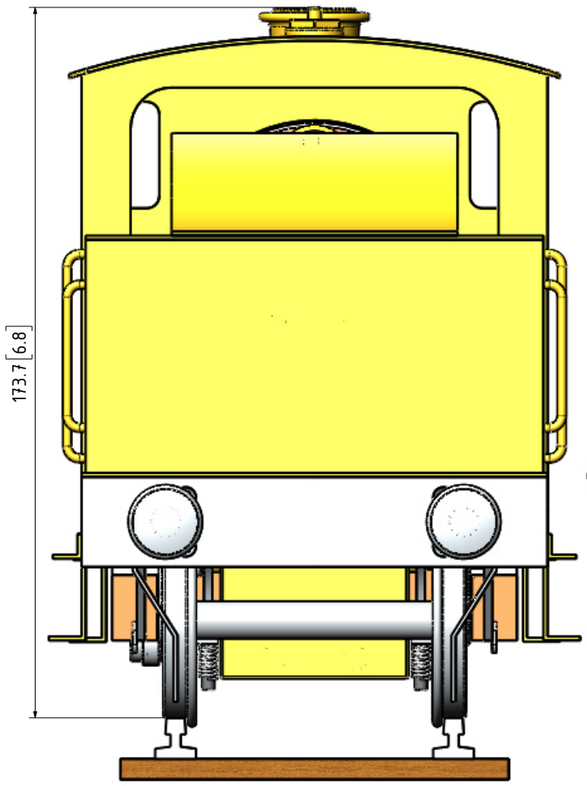

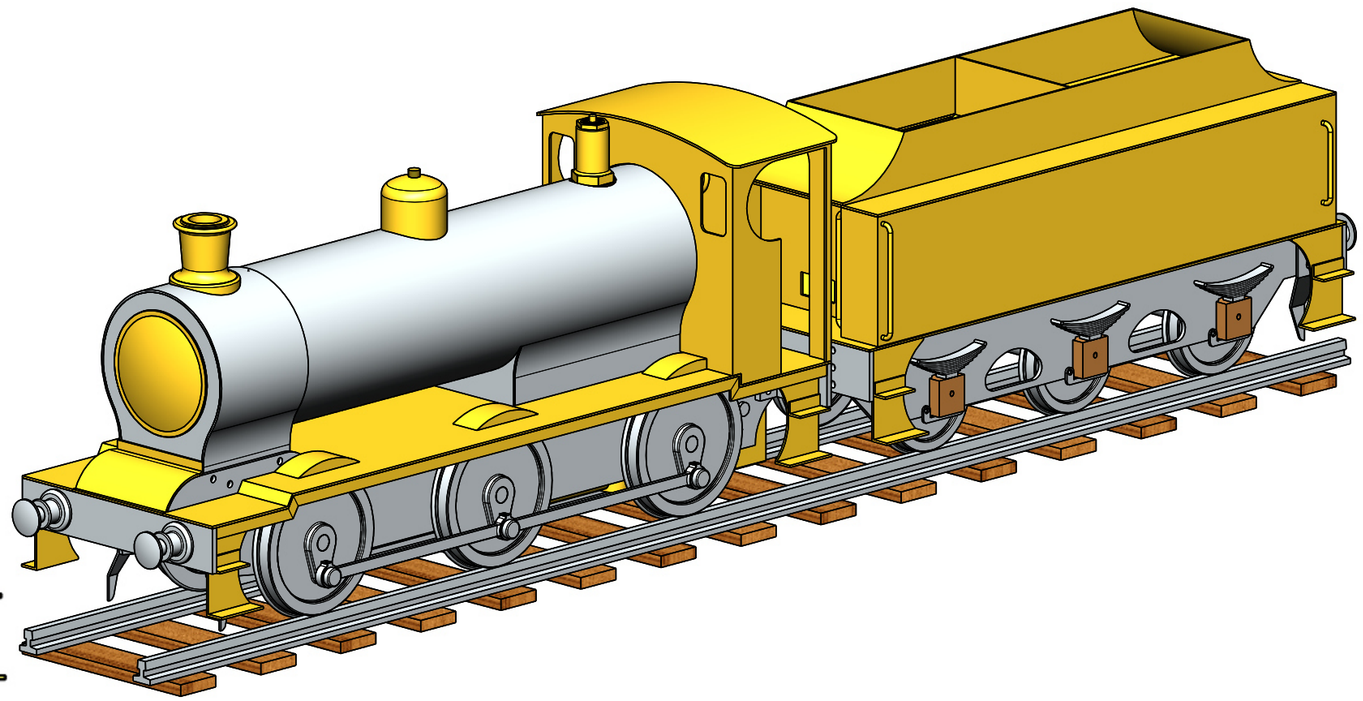

IMPORTANT NOTE:
BEFORE STARTING: IT IS STRONGLY ADVISED THAT THE BOILER AS SHOWN ON THESE DRAWINGS SHOULD BE INSPECTED BY AN AUTHORISED PROFESSIONAL ENGINEER AND THE WORKING AND MAXIMUM BOILER PRESSURE TO BE CALCULATED.
MAKE SURE THE BOILER FULLY COMPLIES WITH THE LOCAL RULES AND REGULATIONS OF MODEL BOILERS.
A COMPLIANCE AND SAFETY/TEST CERTIFICATE SHOULD BE OBTAINED.

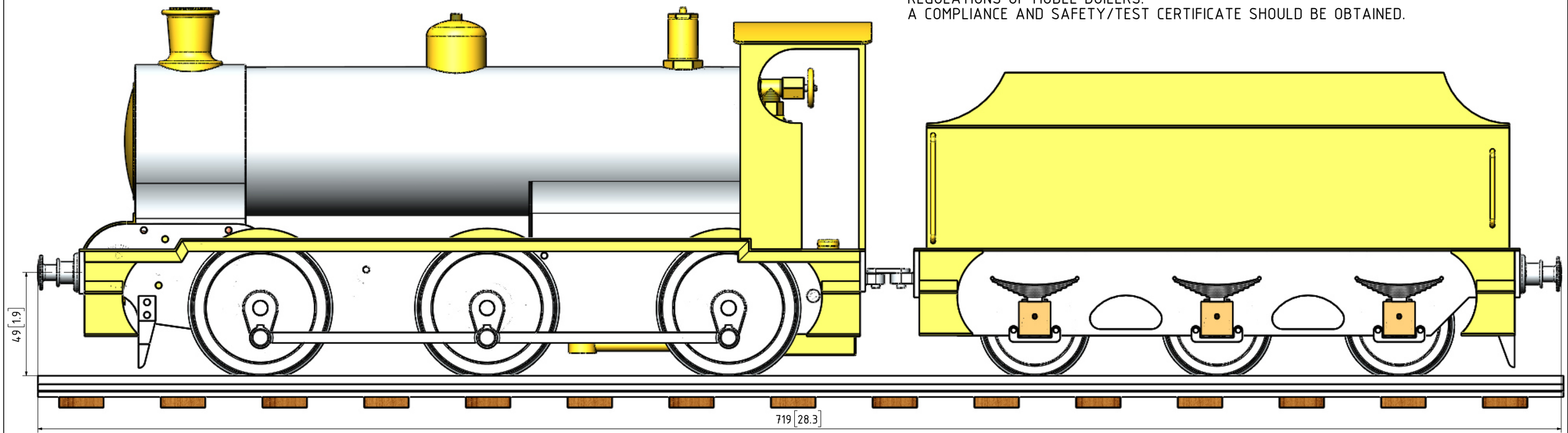

NOTES: THE ORIGINAL DRAWINGS WERE DOWNLOADED FROM THE "MODELENGINEERINGWEBSITE" WEBSITE. THE ORIGINAL DRWAINGS WERE PUBLISHED IN THE MODEL ENGINEER MAGAZINE UNDER THE TITLE "THE SIX YEAR-OLD'S "4F" BY L.B.S.C. DATED 7 DECEMBER 1944 PAGES 539 TO 543 AND THE TENDER WAS PUBLISHED ON 21 DECEMBER 1944 PAGES 589 AND 590

TITLE
A SIMPLIFIED SPIRIT FIRED LOCOMOTIVE OF THE L.M.S CLASS "4F" (2.5"/63.5mm GAUGE)

DRAWING CONTENTS
GENERAL ARRANGEMENT, ISOMETRIC VIEW AND NOTE

PROJECT No 07B-18-00
JDW DRAUGHTING SERVICES
J.A.M. DE WAAL. 12 BRIGHTWELL STREET PAPAKURA 2110. NEW ZEALAND. PHONE: 0064 09 2988815. MOB: 0211791000 E-MAIL: dewaal@xtra.co.nz.

PROJECTION JDWDS
DATE JANUARY 2020
SHEET: 01 OF 08
MODEL SCALE: 1:1
DWG SCALE: NTS @A3 OR AS SHOWN
Copyright © J.A.M. DE WAAL PAPAKURA NZ
A3 No: 07B-18-00-SHT01

DRAWINGS ARE FOR PERSONAL USE ONLY NOT FOR COMMERCIAL PURPOSES

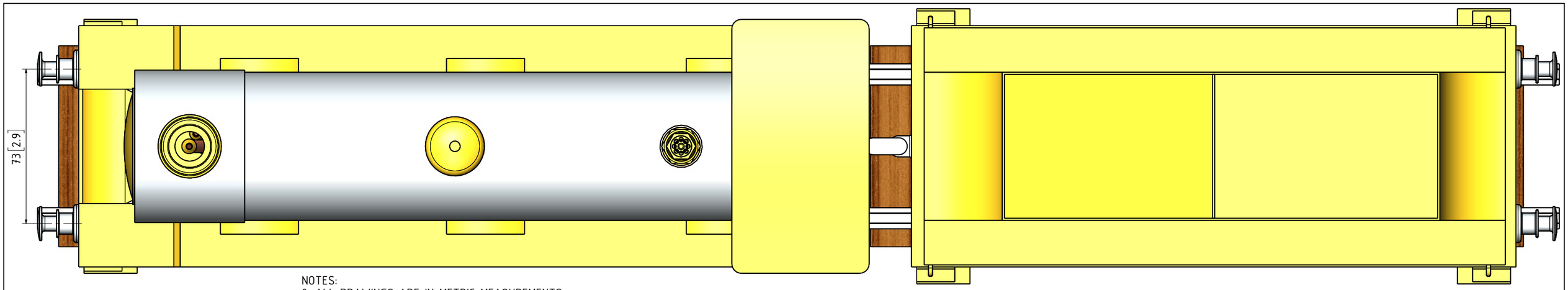

QTY.	PART NUMBER
1	07B-18-00-1-01-UNDERFRAME
6	07B-18-00-1-02-HORNSTAY
6	07B-18-00-1-03-AXLE BLOCK
1	07B-18-00-1-04-CYLINDER BLOCK
1	07B-18-00-1-05-CYLINDER BLOCK FRONT COVER
1	07B-18-00-1-06-CYLINDER BLOCKREAR COVER
1	07B-18-00-1-07-DISPLACEMENT LUBRICATOR
2	07B-18-00-1-08-BUFFER
1	07B-18-00-1-09-FUEL TANK+BURNERS
1	07B-18-00-1-10-LOCO RAIL SCOOP
1	07B-18-00-1-10-LOCO RAIL SCOOP
2	07B-18-00-2-01-FRONT+REARWHEEL+AXLE
1	07B-18-00-2-02-CENTER WHEEL+AXLE
2	07B-18-00-2-03-COUPLINR ROD
1	07B-18-00-2-04-PISTON+CROSSHEAD
1	07B-18-00-2-05-CON-ROD
1	07B-18-00-2-06-ECCENTRIC
1	07B-18-00-2-07-ECCENTRIC STOP COLLAR
1	07B-18-00-2-08-SLIDE VALVE+ROD
1	07B-18-00-2-09-ECCENTRIC STRAP
1	07B-18-00-3-01-OUTER BOILER SHELL
2	07B-18-00-3-02-BOILER NIPPLE M10x14x18
3	07B-18-00-3-03-BOILER NIPPLE M8x10x14
1	07B-18-00-3-04-BLOWER VALVE
1	07B-18-00-3-05-STEAM SUPPLY VALVE
1	07B-18-00-3-06-WATER FILLER STOP
1	07B-18-00-3-07- WATER FILLER DOME
1	07B-18-00-3-08-SAFETY VALVE
1	07B-18-00-3-09-WATER LEVEL VALVE
1	07B-18-00-3-10-STEAM SUPPLY PIPE
1	07B-18-00-3-11-BLOWER NOZZLE
1	07B-18-00-3-12-SMOKE BOX
1	07B-18-00-3-13-CHIMNEY
1	07B-18-00-4-01-FRONT FOOTPLATE
1	07B-18-00-4-02-FOOTPLATE
4	07B-18-00-4-03-WHEEL ARCH TYPE-A
1	07B-18-00-4-04-WHEEL ARCH TYPE-B
1	07B-18-00-4-04-WHEEL ARCH TYPE-B
1	07B-18-00-4-05-DRIVERS CABIN
2	07B-18-00-4-06-SIDE STEP
2	07B-18-00-4-06-SIDE STEP
1	07B-18-00-5-01-TENDER UNDER FRAME
4	07B-18-00-5-02-TENDER AXLE BOX TYPE-A
2	07B-18-00-5-03-TENDER AXLE BOX TYPE-B
3	07B-18-00-5-04-TENDER WHEEL+AXLE
2	07B-18-00-5-05-TENDER BUFFER
1	07B-18-00-5-06-TENDER FOOTPLATE
1	07B-18-00-5-06-TENDER WATER+COAL BUNKER
4	07B-18-00-5-07-TENDER FRONT HAND RAIL
2	07B-18-00-5-08-TENDER REAR HAND RAIL
2	07B-18-00-5-09-TENDER SIDE STEP
2	07B-18-00-5-09-TENDER SIDE STEP
1	07B-18-00-5-10-TENDER RAIL SCOOP
1	07B-18-00-5-10-TENDER RAIL SCOOP
1	07B-18-00-64mm-RAIL

NOTES:
0. ALL DRAWINGS ARE IN METRIC MEASUREMENTS
1. ALL ENGINEERING PRACTICES SHALL BE APPLIED WITH REGARDS TO HOLE AND SHAFT TOLERANCES.
2. WHERE SCREWS OR BOLTS ARE USED THE CLEARANCE HOLES SHALL BE APPROXIMATELY 5% TO 8% LARGER THAN THE MATCHING TAPPED HOLE.
3. PREFERABLY ALL TAPPED HOLES AND MATCHING SCREWS AND/OR BOLTS TO BE METRIC FINE (MF)
4. MATERIALS SPECIFIED ON THE DRAWINGS ARE INDICATIVE ONLY. THE BUILDER CAN MAKE HIS/HER OWN MATERIAL CHOICE.
5. ALL CONNECTIONS/JOINTS WHICH HAVE STEAM PRESSURE APPLIED TO IT SHALL BE SILVER/HARD SOLDERED.
6. COMPRESSION SPRINGS ARE DRAWN IN COMPRESSED STATE (CP), UNCOMPRESSED STATE IS APPROX 40% TO 60% LONGER THEN COMPRESSED STATE.
7. WHERE PREFERRED SCREW OR RIVETED CONNECTIONS CAN BE OMITTED AND PARTS CAN BE BONDED TOGETHER BY USING EITHER HIGH STRENGTH GLUE, EPOXY RESIN, OR SOLDER.
8. PARTS WHICH ARE DIRECTLY EXPOSED TO STEAM AND/OR WATER SHOULD BE CONSTRUCTED USING NON-FERROUS OR NON CORROSIVE MATERIAL SUCH AS BRASS, BRONZE, GUNMETAL, STAINLESS STEEL, COPPER OR MONEL.
9. THE ORDER IN WHICH THE PARTS/COMPONENTS ARE MANUFACTURED AND THE MODEL IS ASSEMBLED IS ENTIRELY LEFT TO THE BUILDER/MODEL MAKER.
10. A COLOUR SCHEME FOR THIS PROJECT IS ENTIRELY LEFT UP TO THE MODEL MAKER.
11. THE MANNER IN WHICH THE PARTS/COMPONENTS ARE MANUFACTURED IS ENTIRELY LEFT UP TO THE BUILDER.
12. USE LOCTITE, ON SCREW OR PRESS FIT CONNECTIONS OR SURFACES, WERE DEEMED NECESSARY TO PREVENT PARTS FROM LOOSENING.
13. WASHERS AND/OR SPRING WASHERS SHALL BE USED WHERE DEEMED NECESSARY.
14. INQUIRE AT THE APPROPRIATE AUTHORITIES WHETHER OR NOT THIS BOILER REQUIRE A PRESSURE TEST CERTIFICATE.
XX. ERRORS AND/OR OMISSIONS MAY OCCUR IN THE DRAWINGS, DO NOT HESITATE TO CONTACT ME SO THAT THE ERRORS/OMISSIONS CAN BE RECTIFIED.

MATERIAL ABBREVIATIONS:
ALU = ALUMINIUM
HALU= HARD ALUMINIUM
BRS = BRASS
BRZ = BRONZE OR GUNMETAL (BRZ/GM)
CI = CAST IRON
CU = COPPER
GRA = GRAPHITE
MS = MILD STEEL/BRIGHT MILD STEEL
SS = SILVER STEEL OR STAINLESS STEEL
SPS = SPRING STEEL
PEEK= POLYETHER ETHER KETONE
SYN = SYNTHETIC MATERIAL SUCH AS VETON, NYLON, TEFLON OR RUBBER
IN GENERAL SYNTHETIC MATERIALS SOULD BE ABLE TO WITHSTAND THE HEAT AND PRESSURE(S) APPLIED TO THEM.
nnn/nnn MEANS THAT EITHER MATERIAL CAN BE USED

OTHER ABBREVIATIONS
AS = AS SHOWN
DP = DEEP
DAA= DRILL AFTER ASSEMBLY
D&TAA= DRILL AND TAP AFTER ASSEMBLY
CF = CLOSE FIT (SIZE FOR SIZE)
PF = PRESS FIT
PFAA= PRESS FIT AFTER ASSEMBLY
PCD = PITCH CIRCLE DIAMETER
RM = REAM
HEX = HEXACON, 6SIDED
CP = COMPRESSED
KNL = KNURLED
CSK = COUNTERSINK
PL = PLACES
DWL= DOWEL
SPF= SPOTFACE
(T)HESOP=(TAPPED)HOLES EQUALLY SPACED ON PCD
(T)HESOC=(TAPPED)HOLES EQUALLY SPACED ON CIRCUMFERENCE
OD = OUTSIDE DIAMETER
ID = INSIDE DIAMETER
SA-xxx= SUB ASSEMBLY-xxx

THE OFF SET ANGLE OF THE ECCENTRIC IN RELATION TO THE CRANK AXIS TO BE EXPERIMENTALLY DETERMINED FOR THE SMOOTH RUNNING OF THE ENGINE AND SATISFACTION OF THE BUILDER

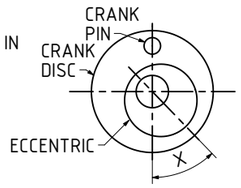

ADDITIONAL NOTES ABOUT THESE DRAWINGS:
0) NO MATERIALS HAVE BEEN SPECIFIED ON THESE DRAWINGS. THE BUILDER TO CHOOSE ITS OWN PREFERRED MATERIAL FOR THE PARTS/COMPONENTS. THE FOLLOWING COLOURS ON THE DRAWINGS INDICATES POSSIBLE MATERIALS WHICH CAN BE USED FOR PARTS: YELLOW=BRASS, LIGHT GREY=ALUMINIUM OR MILD STEEL, REDDISH BROWN=COPPER, DARK BROWN=BRONZE OR GUN METAL, WHITISH=SILVER STEEL OR STAINLESS STEEL
1) FASTENERS.
NO FASTENERS SUCH AS RIVETS, BOLTS, SCREWS, NUTS AND WASHERS HAVE BEEN SHOW ON THESE DRAWINGS. THE BUILDER TO CHOOSE ITS OWN PREFERRED TYPE OF FASTENERS.
2) PRESSURE GAUGE.
NO PRESSURE GAGE IS SHOWN ON THESE DRAWINGS. IF PRESSURE GAUGE IS REQUIRED THEN THE RANGE OF THE PRESSURE GAUGE IS TO BE DETERMENT AFTER MAXIMUM BOILER PRESSURE IS ESTABLISHED AND THE AVAILABILITY ON THE MARKET.
THE PRESSURE GAUGE IS A PROPRIETY ITEM.
3) PIPING
PREFERABLY ALL PIPING TO BE COPPER. THE PIPING ON THE DRAWINGS ARE INDICATIVE ONLY. THE BUILDER TO ESTABLISH THE PIPE LENGTH AND ROUTE FROM WORK PIECE. THE PIPE SIZES ARE INDICATIVE ONLY. THE BUILDER TO ESTABLISH THE AVAILABILITY OF THE PIPE SIZE(S) FROM THE LOCAL SUPPLIER(S). THE PIPE NUT(S) TO BE ADJUSTED TO THE USED PIPE SIZE.
4) BOILER.
BEFORE STARTING: THE BOILER AS SHOWN ON THESE DRAWING SHOULD BE INSPECTED BY AN AUTHORISED PROFESSIONAL ENGINEER. THE RUNNING AND MAXIMUM BOILER PRESSURE TO BE CALCULATED. MAKE SURE THE THE BOILER FULLY COMPLIES WITH THE LOCAL RULES AND REGULATIONS OF MODEL BOILERS. A COMPLIANCE AND TEST CERTIFICATE SHOULD BE OBTAINED.
BOILER INSULATION IS NOT SHOWN ON THESE DRAWINGS.
IF BOILER INSULATION IS PREFERRED THEN THE THE FOLLOWING COULD BE CONSIDERED: INSULATION MATERIAL 3 TO 5mm THICK .
THE BOILER DOME IS REMOVABLE SO THAT THERE IS ACCESS TO THE BOILER WATER FILLER CAP.
5) CHIMNEY.
THE CHIMNEY HAS A LIGHT PRESS FIT.
6) DUMMY PARTS.
IF PREFERRED SOME OF THE DUMMY PARTS COULD BE REPLACED WITH REAL OPERATING PART(S). THE BUILDER TO DESIGN THE PART OR ALTERNATIVELY PURCHASE.
7) ENHANCEMENT
THE APPEARANCE OF THE LOCOMOTIVE COULD BE ENHANCED BY ADDING SOME EXTRA PARTS SUCH AS: LAMP HOLDERS, FRONT AND REAR LIGHTS, FLAG HOLDERS, BELL(S), REAL WHISTLE, OPERATIONAL BRAKE SYSTEM, DRIVERS CABIN HAND RAILS.
8) FRONT FOOTPLATE TO BE REMOVABLE SO THAT THERE IS ACCESS TO THE LUBRICATOR.
9) THE SAFETY VALVE TO BE SET TO THE NOMINAL WORKING PRESSURE OR AS ADVISED BY THE APPROPRIATE AUTHORITIES.

NOTES: THE ORIGINAL DRAWINGS WERE DOWNLOADED FROM THE "MODELENGINEERINGWEBSITE" WEBSITE. THE ORIGINAL DRWAINGS WERE PUBLISHED IN THE MODEL ENGINEER MAGAZINE UNDER THE TITLE "THE SIX YEAR-OLD'S "4F" BY L.B.S.C. DATED 7 DECEMBER 1944 PAGES 539 TO 543 AND THE TENDER WAS PUBLISHED ON 21 DECEMBER 1944 PAGES 589 AND 590

TITLE
A SIMPLIFIED SPIRIT FIRED LOCOMOTIVE OF THE L.M.S CLASS "4F" (2.5"/63.5mm GAUGE)

DRAWING CONTENTS
TOP VIEW, BILL OF MATERIALS AND NOTES

PROJECT No 07B-18-00
JDW DRAUGHTING SERVICES
J.A.M. DE WAAL. 12 BRIGHTWELL STREET PAPAKURA 2110. NEW ZEALAND. PHONE: 0064 09 2988815. MOB: 0211791000 E-MAIL: dewaal@xtra.co.nz.

PROJECTION | JDWDS | MODEL SCALE: 1:1
DATE JANUARY 2020 | DWG SCALE: NTS @A3 OR AS SHOWN
Copyright © J.A.M. DE WAAL PAPAKURA NZ
SHEET: 02 OF 08 | A3 | No: 07B-18-00-SHT02

DRAWINGS ARE FOR PERSONAL USE ONLY NOT FOR COMMERCIAL PURPOSES

2mm THICK 2 REQD SCALE 1:2

2.5mm THICK SCALE 1:2

SCALE 1:2

2 REQD

2 REQD

4mm THICK

TAKE OVER ALL HOLES FROM 1-04.2

CYLINDER ℄

SECTION B-B

TAKE OVER ALL HOLES FROM 1-04.1

SOLDER END PLATES

TUBE 3x2.5

PLUG

SOLDER

TUBE 6x5

SOLDER ALL CORNERS SCALE 1:2

SECTION A-A

HIDDEN LINES REMOVED FOR CLATITY

ALL SLOTS 5mm DEEP

DETAIL D

OPPOSITE FACE EQUAL

371MAX/MIN

50-MAX/MIN

SOLDER

SOLDER

WICK MATERIAL

FOLD UP

FOLD LINE

DRILL ALL HOLES AFTER ASSEMBLY

0.5mm THICK SCALE 1:2

SCALE 1:2

REFER 1-094A SCALE 1:2

1x LEFT
1x RIGHT

NOTES: THE ORIGINAL DRAWINGS WERE DOWNLOADED FROM THE "MODELENGINEERINGWEBSITE" WEBSITE. THE ORIGINAL DRWAINGS WERE PUBLISHED IN THE MODEL ENGINEER MAGAZINE UNDER THE TITLE "THE SIX YEAR-OLD'S "4F" BY L.B.S.C. DATED 7 DECEMBER 1944 PAGES 539 TO 543 AND THE TENDER WAS PUBLISHED ON 21 DECEMBER 1944 PAGES 589 AND 590

TITLE

A SIMPLIFIED SPIRIT FIRED LOCOMOTIVE OF THE L.M.S CLASS "4F" (2.5"/63.5mm GAUGE)

DRAWING CONTENTS

PARTS AND ASSEMBLIES

PROJECT No 07B-18-00
JDW DRAUGHTING SERVICES
J.A.M. DE WAAL. 12 BRIGHTWELL STREET PAPAKURA 2110. NEW ZEALAND. PHONE: 0064 09 2988815. MOB: 0211791000 E-MAIL: dewaal@xtra.co.nz.

PROJECTION

JDWDS

DATE JANUARY 2020

MODEL SCALE: 1:1
DWG SCALE: 1:1 @A3 OR AS SHOWN

Copyright © J.A.M. DE WAAL PAPAKURA NZ

SHEET: 03 OF 08 A3 No: 07B-18-00-SHT03

DRAWINGS ARE FOR PERSONAL USE ONLY NOT FOR COMMERCIAL PURPOSES

SA-1-101

SA-1-105

SA-2-201

THE COLLAR STOP (2-07) SHALL BE SET, SO THAT THE ECCENTRIC ANGLE IN RELATION TO THE CRANKPIN IS IN SUCH A WAY THAT, WHEN THE ENGINE IS RUNNING FORWARD OR IN REVERSE, IT SHOULD BE RUNNING SMOOTHLY AND TO THE BUILDERS SATISFACTION

NOTE: CRANK PINS 90deg OFFSET FOR 2-02.2 REFER TO 2-01.2 FOR 2-02.3 REFER TO 2-01.3

NOTE: CRANK PINS 90deg OFFSET

SECTION A-A SCALE 1 : 1.5

SCALE 1:1.5

SCALE 1:2

2 REQD

90-MAX/MIN SCALE 1:1.5

56-MAX/MIN

73-MAX/MIN

4.5mm THICK

SPLIT LINE

O-RING

1mm THICK SCALE 1:2

NOTES: THE ORIGINAL DRAWINGS WERE DOWNLOADED FROM THE "MODELENGINEERINGWEBSITE" WEBSITE. THE ORIGINAL DRWAINGS WERE PUBLISHED IN THE MODEL ENGINEER MAGAZINE UNDER THE TITLE "THE SIX YEAR-OLD'S "4F" BY L.B.S.C. DATED 7 DECEMBER 1944 PAGES 539 TO 543 AND THE TENDER WAS PUBLISHED ON 21 DECEMBER 1944 PAGES 589 AND 590

TITLE

A SIMPLIFIED SPIRIT FIRED LOCOMOTIVE OF THE L.M.S CLASS "4F" (2.5"/63.5mm GAUGE)

DRAWING CONTENTS

PARTS AND ASSEMBLIES

PROJECT No 07B-18-00

JDW DRAUGHTING SERVICES

J.A.M. DE WAAL. 12 BRIGHTWELL STREET PAPAKURA 2110. NEW ZEALAND. PHONE: 0064 09 2988815. MOB: 0211791000 E-MAIL: dewaal@xtra.co.nz.

PROJECTION

JDWDS

DATE JANUARY 2020

MODEL SCALE: 1:1

DWG SCALE: 1:1 @A3 OR AS SHOWN

Copyright © J.A.M. DE WAAL PAPAKURA NZ

SHEET: 04 OF 08

A3

No: 07B-18-00-SHT04

DRAWINGS ARE FOR PERSONAL USE ONLY NOT FOR COMMERCIAL PURPOSES

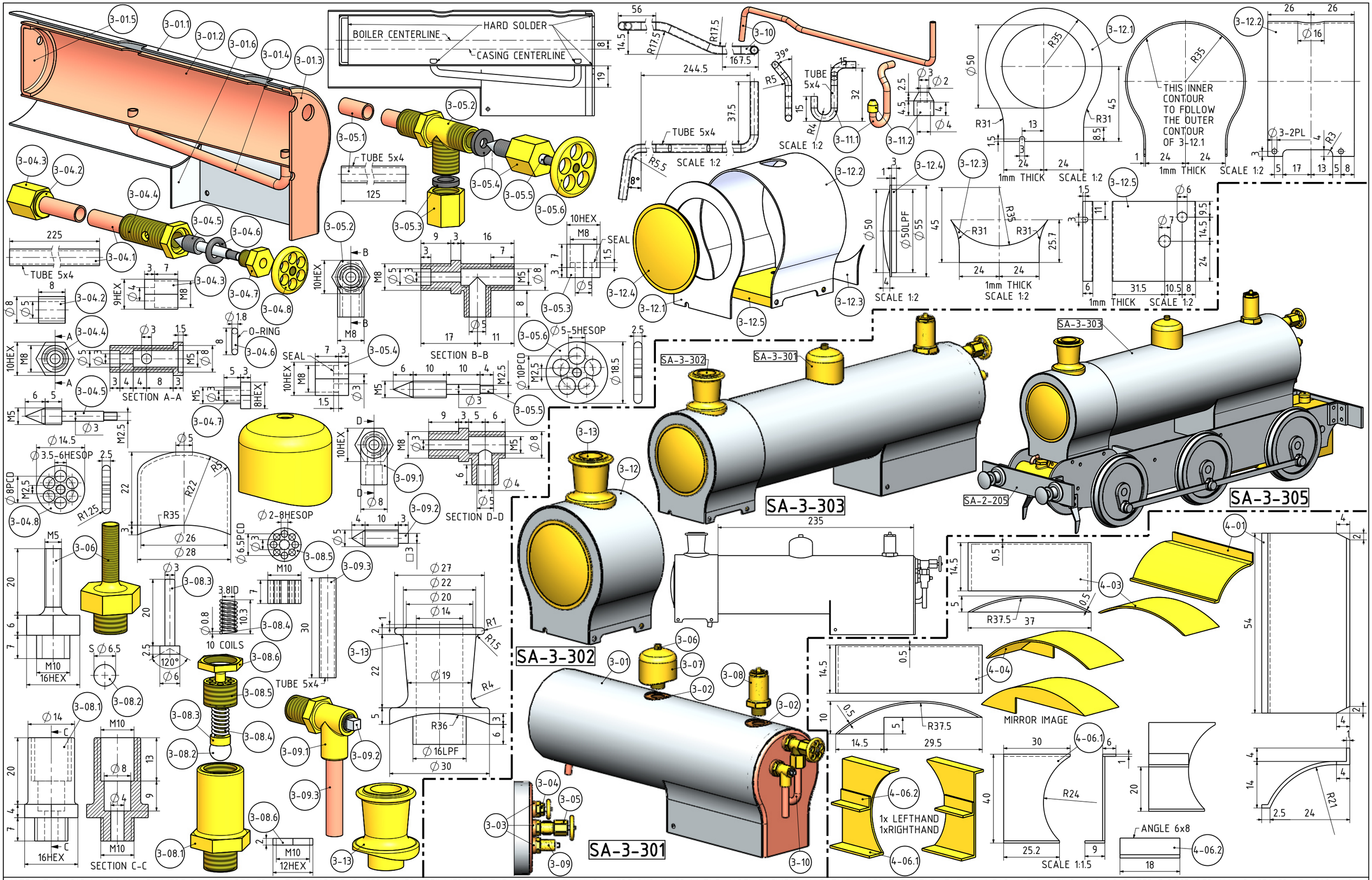

NOTES: THE ORIGINAL DRAWINGS WERE DOWNLOADED FROM THE "MODELENGINEERINGWEBSITE" WEBSITE. THE ORIGINAL DRWAINGS WERE PUBLISHED IN THE MODEL ENGINEER MAGAZINE UNDER THE TITLE "THE SIX YEAR-OLD'S "4F" BY L.B.S.C. DATED 7 DECEMBER 1944 PAGES 539 TO 543 AND THE TENDER WAS PUBLISHED ON 21 DECEMBER 1944 PAGES 589 AND 590

TITLE

A SIMPLIFIED SPIRIT FIRED LOCOMOTIVE OF THE L.M.S CLASS "4F" (2.5"/63.5mm GAUGE)

DRAWING CONTENTS

PARTS AND ASSEMBLIES

JDW DRAUGHTING SERVICES
J.A.M. DE WAAL. 12 BRIGHTWELL STREET PAPAKURA 2110. NEW ZEALAND. PHONE: 0064 09 2988815. MOB: 0211791000 E-MAIL: dewaal@xtra.co.nz.

PROJECT No 07B-18-00

PROJECTION JDWDS

DATE JANUARY 2020

SHEET: 05 OF 08

MODEL SCALE: 1:1

DWG SCALE: 1:1 @A3 OR AS SHOWN

Copyright © J.A.M. DE WAAL PAPAKURA NZ

A3 No: 07B-18-00-SHT05

DRAWINGS ARE FOR PERSONAL USE ONLY NOT FOR COMMERCIAL PURPOSES

SCALE 1:2

1mm THICK PLATE

SCALE 1:2

2mm THICK 2 REQD SCALE 1:2

ANGLE 5x5x1

ANGLE 5x5x1

BRAZE OR SOLDER

2.5mm THICK SCALE 1:2

SCALE 1:2

SECTION A-A

CSK

FOR ALL OTHER DIMENSION DETAILS REFER TO 5-02

SCALE 1:1.5

1mm THICK 6 REQD

DUMMY LEAFSPRING

SCALE 1:1.5

SCALE 1:1.5 B

SECTION B-B SCALE 1 : 1.5

6 REQD

SCALE 1:1.5

REFER TO 1-08

REFER TO 4-06

1x LEFTHAND
1x RIGHTHAND

REMOVABLE

REMOVABLE

SA-4-401

SA-4-405

NOTES: THE ORIGINAL DRAWINGS WERE DOWNLOADED FROM THE "MODELENGINEERINGWEBSITE" WEBSITE. THE ORIGINAL DRWAINGS WERE PUBLISHED IN THE MODEL ENGINEER MAGAZINE UNDER THE TITLE "THE SIX YEAR-OLD'S "4F" BY L.B.S.C. DATED 7 DECEMBER 1944 PAGES 539 TO 543 AND THE TENDER WAS PUBLISHED ON 21 DECEMBER 1944 PAGES 589 AND 590

TITLE

A SIMPLIFIED SPIRIT FIRED LOCOMOTIVE OF THE L.M.S CLASS "4F" (2.5"/63.5mm GAUGE)

DRAWING CONTENTS

PARTS AND ASSEMBLIES

PROJECT No 07B-18-00

JDW DRAUGHTING SERVICES
J.A.M. DE WAAL. 12 BRIGHTWELL STREET PAPAKURA 2110. NEW ZEALAND. PHONE: 0064 09 2988815. MOB: 0211791000 E-MAIL: dewaal@xtra.co.nz.

PROJECTION

JDWDS

DATE JANUARY 2020

MODEL SCALE: 1:1

DWG SCALE: 1:1 @A3 OR AS SHOWN

Copyright © J.A.M. DE WAAL PAPAKURA NZ

SHEET: 06 OF 08 A3 No: 07B-18-00-SHT06

DRAWINGS ARE FOR PERSONAL USE ONLY NOT FOR COMMERCIAL PURPOSES

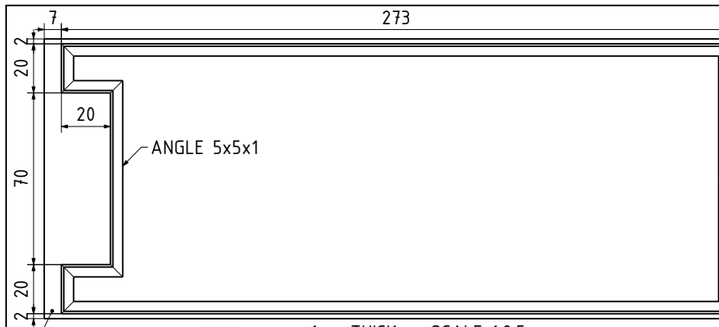

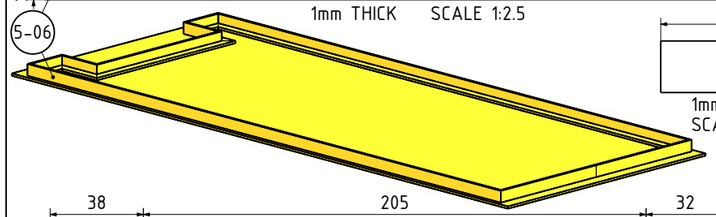

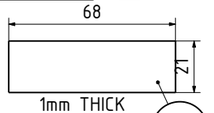

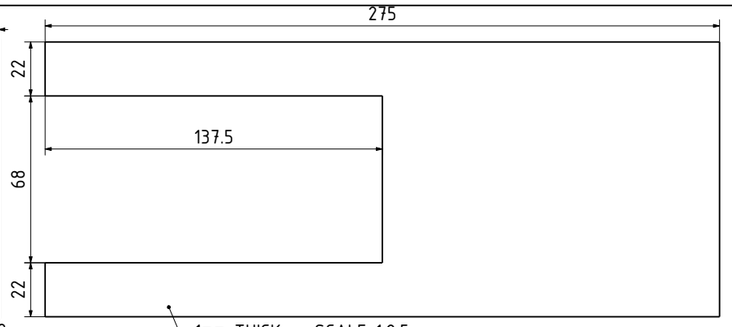

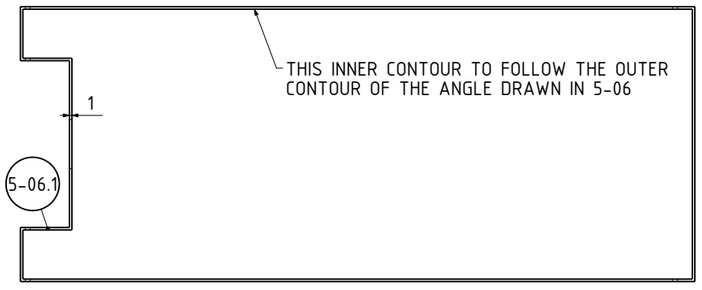

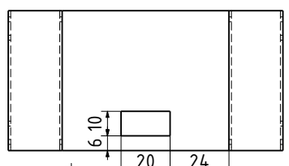

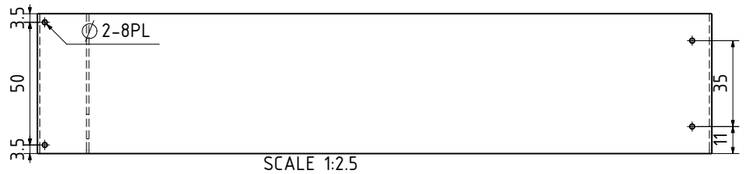

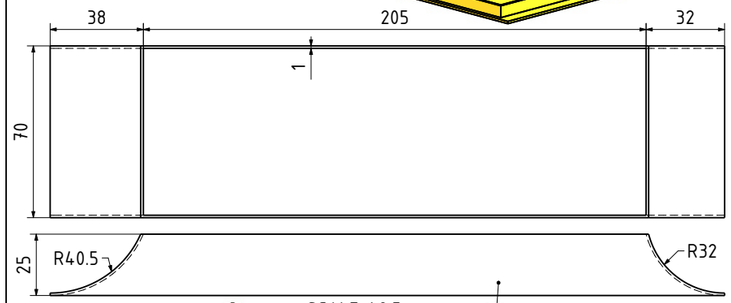

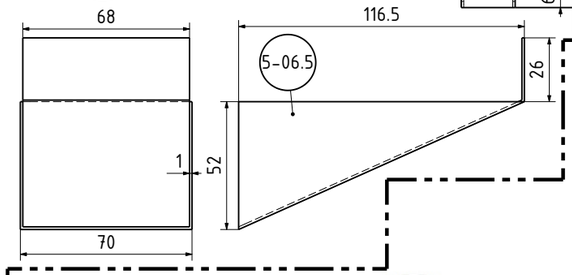

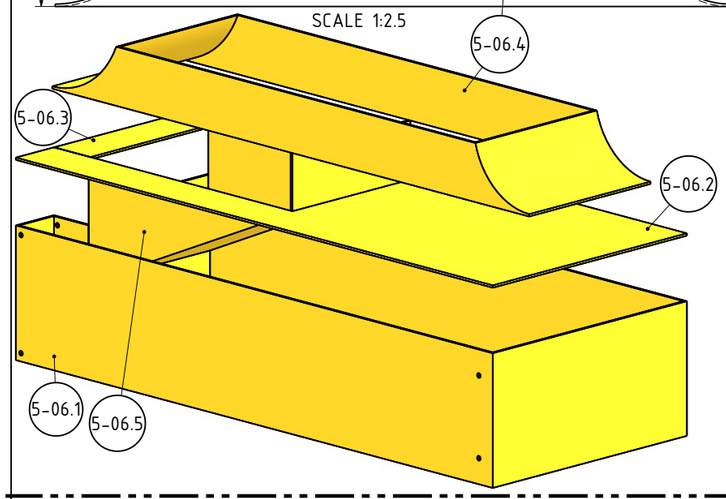

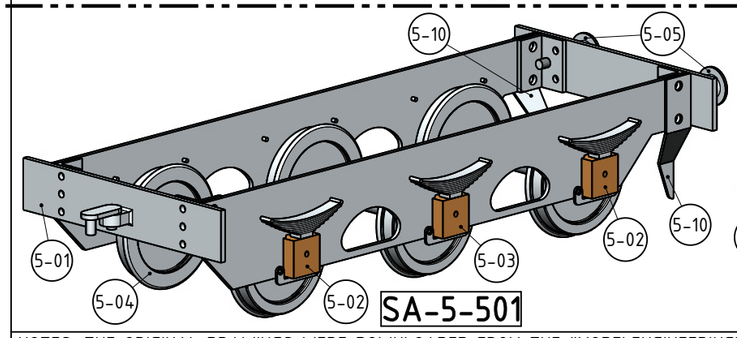

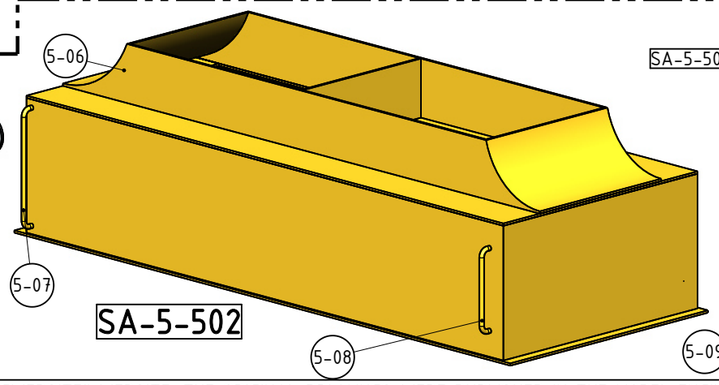

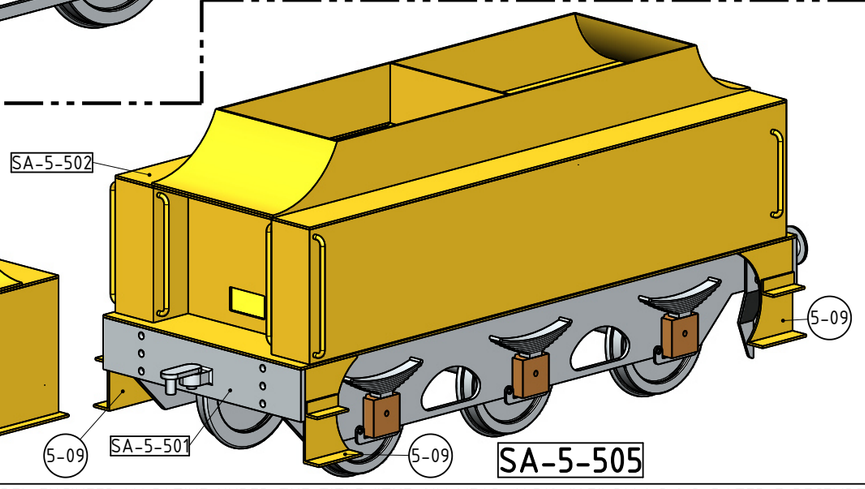

NOTES: THE ORIGINAL DRAWINGS WERE DOWNLOADED FROM THE "MODELENGINEERINGWEBSITE" WEBSITE. THE ORIGINAL DRWAINGS WERE PUBLISHED IN THE MODEL ENGINEER MAGAZINE UNDER THE TITLE "THE SIX YEAR-OLD'S "4F" BY L.B.S.C. DATED 7 DECEMBER 1944 PAGES 539 TO 543 AND THE TENDER WAS PUBLISHED ON 21 DECEMBER 1944 PAGES 589 AND 590

TITLE
A SIMPLIFIED SPIRIT FIRED LOCOMOTIVE OF THE L.M.S CLASS "4F" (2.5"/63.5mm GAUGE)

DRAWING CONTENTS
PARTS AND ASSEMBLIES

PROJECT No 07B-18-00
JDW DRAUGHTING SERVICES
J.A.M. DE WAAL. 12 BRIGHTWELL STREET PAPAKURA 2110. NEW ZEALAND. PHONE: 0064 09 2988815. MOB: 0211791000 E-MAIL: dewaal@xtra.co.nz.

PROJECTION | JDWDS | MODEL SCALE: 1:1
DWG SCALE: 1:1 @A3 OR AS SHOWN
DATE JANUARY 2020 | Copyright © J.A.M. DE WAAL PAPAKURA NZ
SHEET: 07 OF 08 | A3 | No: 07B-18-00-SHT07

DRAWINGS ARE FOR PERSONAL USE ONLY NOT FOR COMMERCIAL PURPOSES

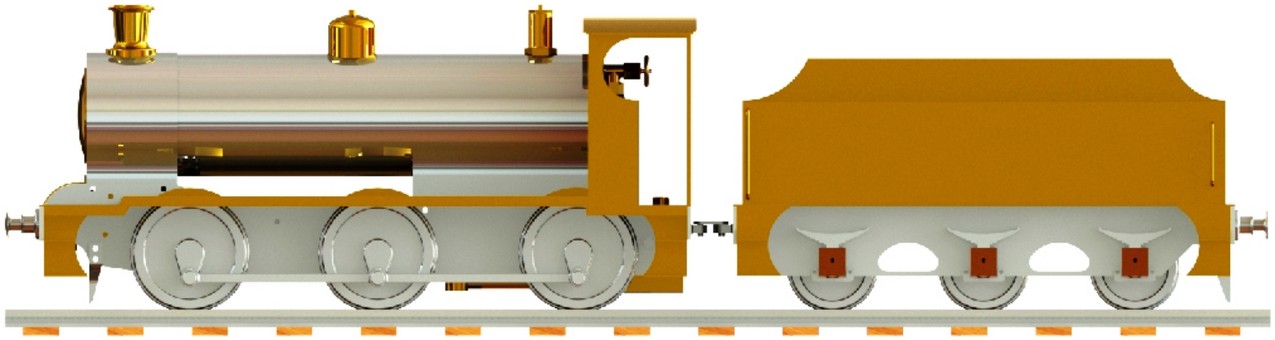

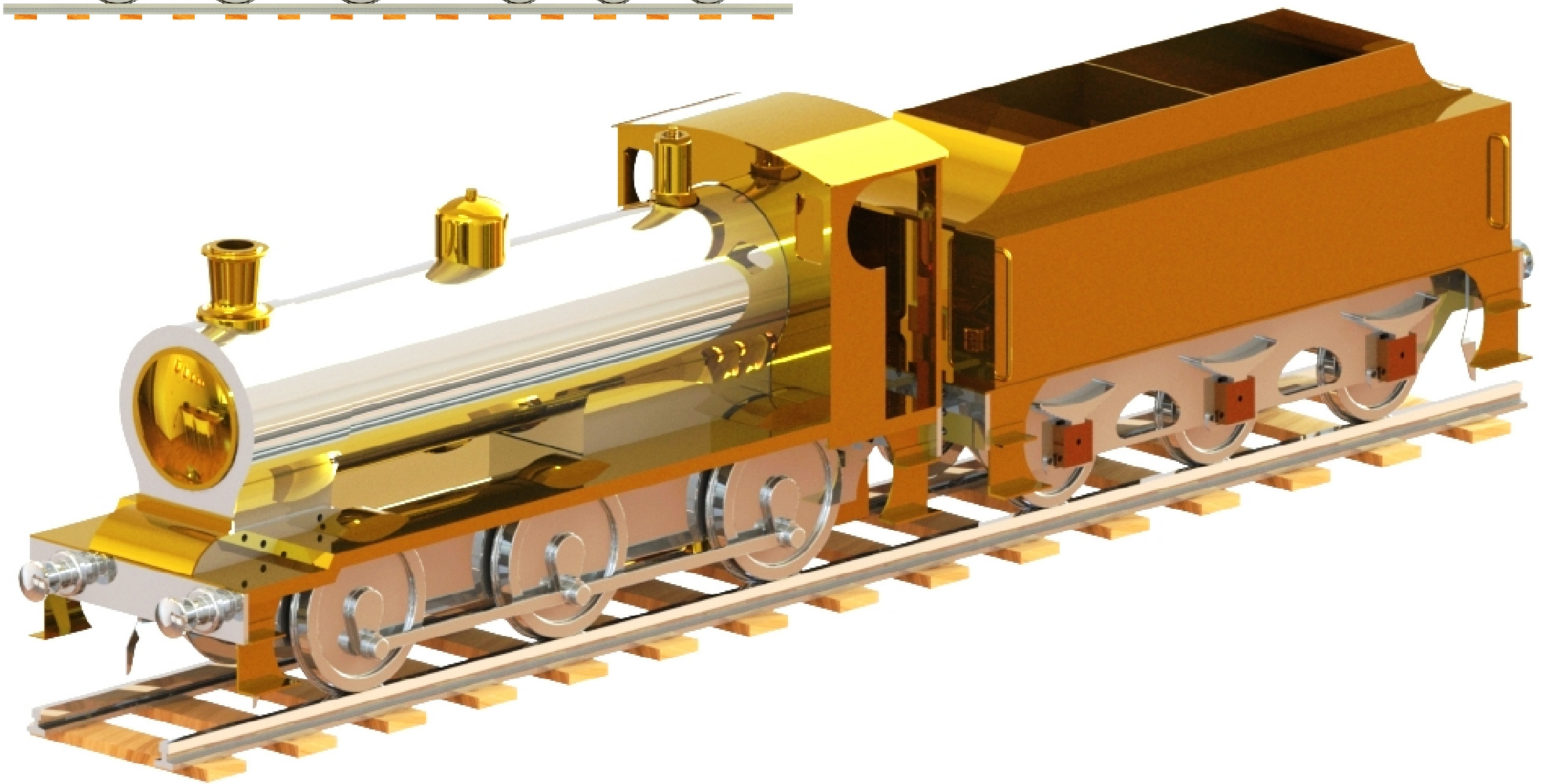

NOTES: THE ORIGINAL DRAWINGS WERE DOWNLOADED FROM THE "MODELENGINEERINGWEBSITE" WEBSITE. THE ORIGINAL DRWAINGS WERE PUBLISHED IN THE MODEL ENGINEER MAGAZINE UNDER THE TITLE "THE SIX YEAR-OLD'S "4F" BY L.B.S.C. DATED 7 DECEMBER 1944 PAGES 539 TO 543 AND THE TENDER WAS PUBLISHED ON 21 DECEMBER 1944 PAGES 589 AND 590

TITLE

A SIMPLIFIED SPIRIT FIRED LOCOMOTIVE OF THE L.M.S CLASS "4F" (2.5"/63.5mm GAUGE)

DRAWING CONTENTS

RENDERED PICTURE

PROJECT No 07B-18-00
JDW DRAUGHTING SERVICES
J.A.M. DE WAAL. 12 BRIGHTWELL STREET PAPAKURA 2110. NEW ZEALAND. PHONE: 0064 09 2988815. MOB: 0211791000 E-MAIL: dewaal@xtra.co.nz.

PROJECTION JDWDS

DATE JANUARY 2020

SHEET: 08 OF 08

MODEL SCALE: 1:1

DWG SCALE: 1:1 @A3 OR AS SHOWN

Copyright © J.A.M. DE WAAL PAPAKURA NZ

A3 No: 07B-18-00-SHT08

DRAWINGS ARE FOR PERSONAL USE ONLY NOT FOR COMMERCIAL PURPOSES