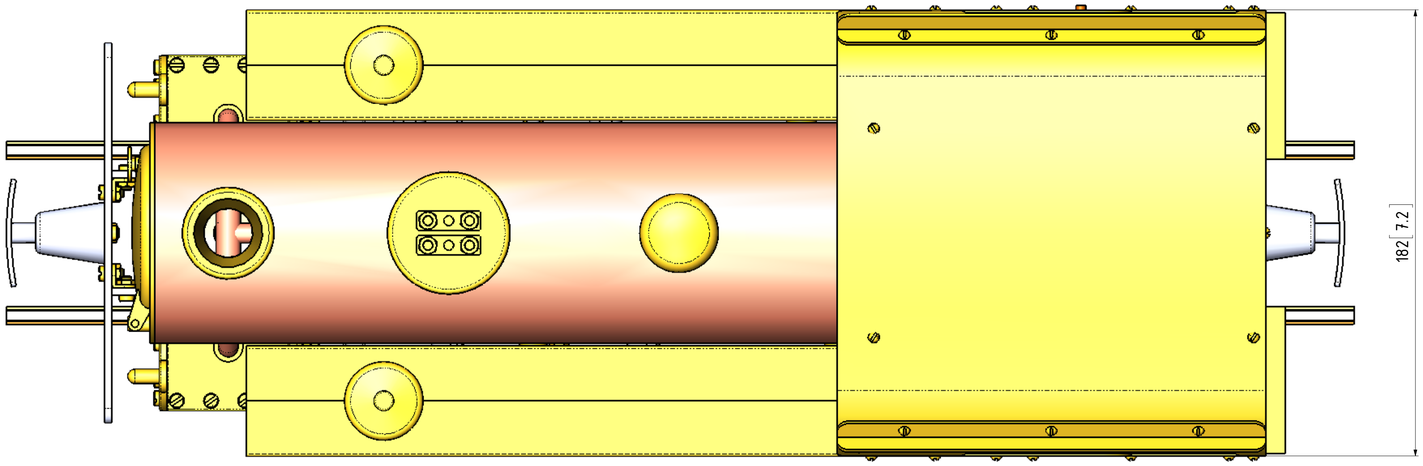

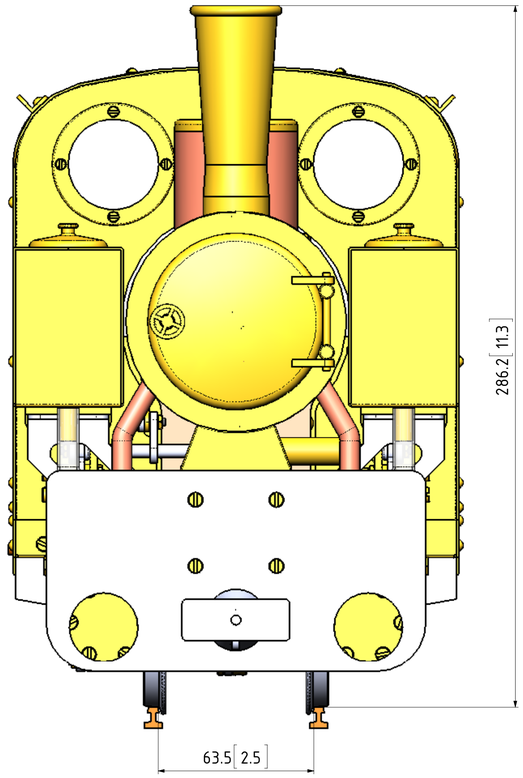

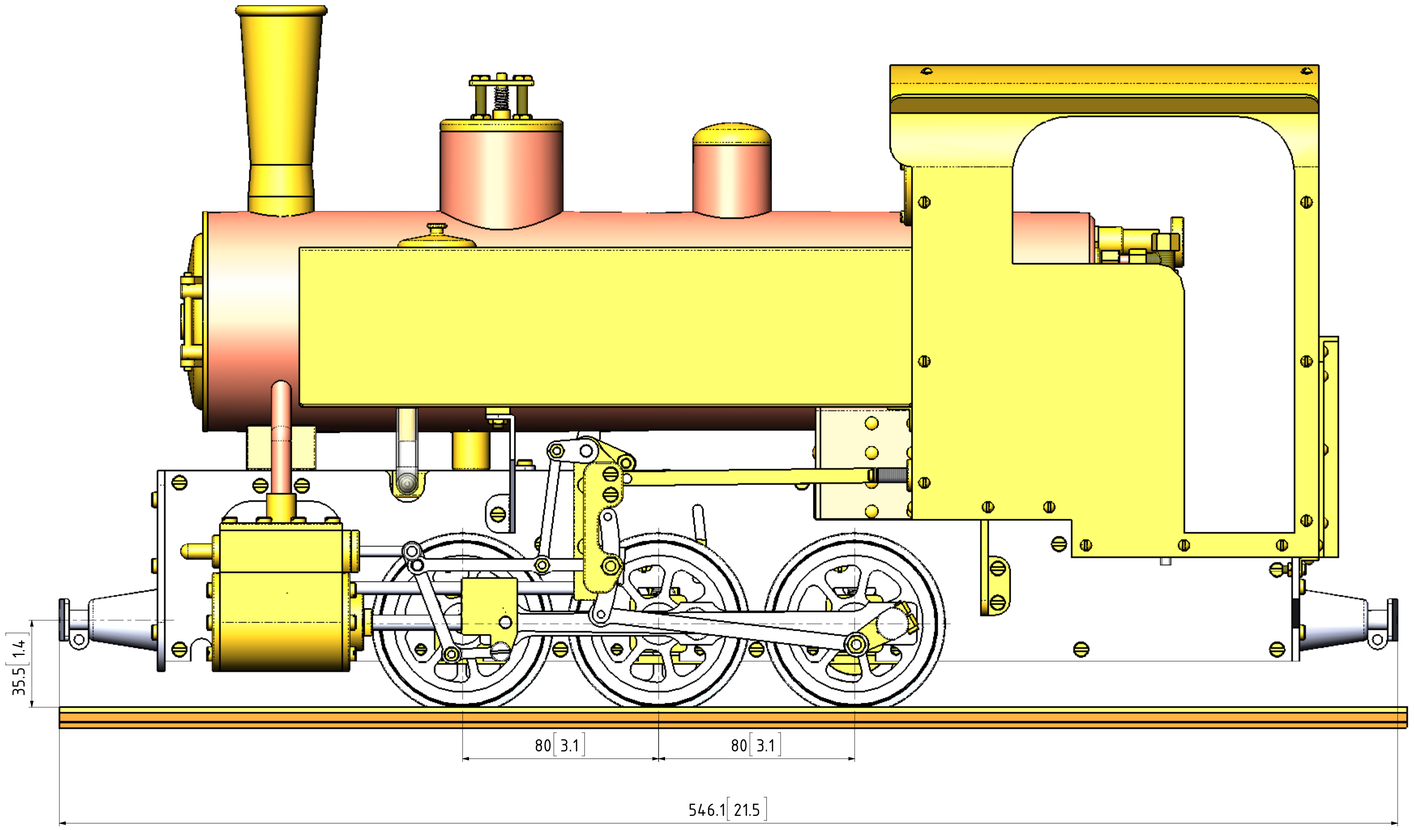

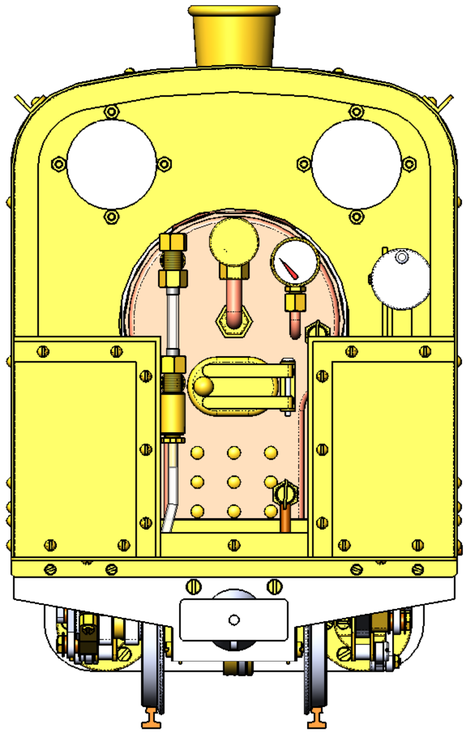

PLEASE NOTE THIS AN A1 SIZE SHEET

TITLE MODEL STEAM LOCOMOTIVE 060T DECAUVILLE	DRAWING CONTENTS GENERAL ARRANGEMENT	PROJECT No JDW DRAUGHTING SERVICES J.A.M. DE WAAL. 12 BRIGHTWELL STREET PAPAKURA 2110. NEW ZEALAND. PHONE: 0064 09 2988815. MOB: 0211791000 E-MAIL: dewaal@xtra.co.nz.	PROJECTION SHEET: 01 OF 08 DATE: JUNE 2012

MODEL SCALE: 1:9.45 GAUGE 63.5mm (2.5")	
DWG SCALE: 2:1 @ A1 OR AS SHOWN	
Copyright © J.A.M. DE WAAL PAPAKURA NZ	
A1	No: DCV060-01

QTY.	PART NUMBER
81	DCV060-00-M3 NUT
2	DCV060-00-M3 WASHER
4	DCV060-00-M3x12 COUNTERSINK SCREW
5	DCV060-00-M3x12 CYLINDERHEAD SCREW
1	DCV060-00-M3x16 COUNTERSINK SCREW
2	DCV060-00-M3x4 GRUB SCREW
51	DCV060-00-M3x5 ROUNDHEAD SCREW
4	DCV060-00-M3x8 COUNTERSINK SCREW
27	DCV060-00-M3x8 CYLINDERHEAD SCREW
1	DCV060-00-M3x8 GRUB SCREW
81	DCV060-00-M4 NUT
2	DCV060-00-M4 WASHER
34	DCV060-00-M4x12 CYLINDERHEAD SCREW
4	DCV060-00-M4x23 CYLINDERHEAD SCREW
16	DCV060-00-M4x27 CYLINDERHEAD SCREW
4	DCV060-00-M4x40 COUNTERSINK SCREW
20	DCV060-00-M4x8 COUNTERSINK SCREW
50	DCV060-00-M4x8 CYLINDERHEAD SCREW
1	DCV060-00-RAIL
1	DCV060-01-01-RIGHT HAND FRAME
1	DCV060-01-02-LEFT HAND FRAME
6	DCV060-01-03-AXLE BOX SPRING STOP ANGLE
6	DCV060-01-04-AXLE BOX SPRING
6	DCV060-01-05-KEEPER
6	DCV060-01-06-AXLE BOX
2	DCV060-01-07-MAIN FRAME MOUNTING ANGLE TYPE-A
2	DCV060-01-08-MAIN FRAME MOUNTING ANGLE TYPE-B
1	DCV060-01-09-STEAM AXHAUST SPACER
1	DCV060-01-10-STEAM EXHAUST PIPE
5	DCV060-01-11-MAIN FRAME SPACER
1	DCV060-01-12-FRONT BUFFER PLATE
1	DCV060-01-13-REAR BUFFER PLATE
2	DCV060-01-14-BUFFER BRACKET
2	DCV060-01-15-BUFFER
1	DCV060-01-16-FRAME SPACER PLATE
1	DCV060-01-17-WATER PUMP LEVER ANGLE BRACKET
1	DCV060-01-18-RH VALVE GEAR MAIN PLATE
1	DCV060-01-19-LH VALVE GEAR MAIN PLATE
2	DCV060-01-20-VALVE GEAR MAIN PLATE SPACER
2	DCV060-01-21-VALVE GEAR PLATE
4	DCV060-01-22-VALVE GEAR PIVOT STUB
2	DCV060-01-23-CYLINDER
2	DCV060-01-24-VALVE CHAMBER
2	DCV060-01-25-VALVE CHAMBER COVER
2	DCV060-01-26-VALVE CHAMBER DOME
2	DCV060-01-27-CYLINDER REAR COVER
2	DCV060-01-28-CYLINDER FRONT COVER
2	DCV060-01-29-VALVE CHAMBER SEALING GLAND
2	DCV060-01-30-CYLINDER REAR COVER SEALING GLAND
2	DCV060-01-31-VALVE CHAMBER SEAL
2	DCV060-01-32-CYLINDER REAR COVER SEAL
2	DCV060-01-33-CROSSHEAD SLIDING BAR
1	DCV060-01-34-WATER PUMP MAIN SHAFT
1	DCV060-01-35-BOILER WATER INJECTOR PUMP BODY
1	DCV060-01-36-BOILER WATER SUPPLY NOZZLE
1	DCV060-01-37-BOILER WATER INJECTOR PUMP BOTTOM SUPPLY SCREW
1	DCV060-01-38-BOILER WATER INJECTOR PUMP VALVE
1	DCV060-01-39-BOILER WATER INJECTOR PUMP SUPPLY SCREW
1	DCV060-01-40-BOILER WATER INJECTOR PUMP NON RETURN VALVE
1	DCV060-01-41-BOILER WATER INJECTOR PUMP NON RETURN VALVE SPRING
1	DCV060-01-42-BOILER WATER INJECTOR PUMP FLANGE
1	DCV060-01-43-BOILER WATER INJECTOR PUMP PISTON SEA
2	DCV060-01-44-WATER TANK CONNECTION HOSE
1	DCV060-01-45-BOILER FRONT SADDLE
3	DCV060-02-01-DRIVE WORK MAIN AXLE
4	DCV060-02-02-DRIVE WORK FRONT WHEEL
2	DCV060-02-03-DRIVE WORK REAR WHEEL
6	DCV060-02-04-DRIVE WORK CON ROD AXLE CAP SCREW
2	DCV060-02-05-DRIVE WORK COUPLING ROD
2	DCV060-02-06-DRIVE WORK PISTON
2	DCV060-02-07-DRIVE WORK PISTON ROD
2	DCV060-02-08-DRIVE WORK PISTON RING
2	DCV060-02-09-DRIVE WORK CROSS HEAD
2	DCV060-02-10-DRIVE WORK CON ROD
2	DCV060-02-11-DRIVE WORK VALVE
1	DCV060-02-12-DRIVE WORK RH-VALVE ROD
1	DCV060-02-12-DRIVE WORK RH-VALVE ROD
2	DCV060-02-13-DRIVE WORK VALVE NUT
2	DCV060-02-14-DRIVE WORK ROCKER
2	DCV060-02-15-DRIVE WORK REVERSING SLIDING BLOCK
2	DCV060-02-16-DRIVE WORK REAR WHEEL ECCENTRIC
2	DCV060-02-17-DRIVE WORK CON ROD LINK
2	DCV060-02-18-DRIVE WORK REAR WHEEL CRANK SPACER
2	DCV060-02-19-DRIVE WORK COUPLING ROD CENTER WASHER
4	DCV060-02-20-DRIVE WORK COUPLING ROD CRANK WASHER
2	DCV060-02-21-DRIVE WORK VALVE ROD LINK-1
2	DCV060-02-22-DRIVE WORK VALVE ROD LINK-2
3	DCV060-02-23-DRIVE WORK REVERSING GEAR MAIN SHAFT CRANK
1	DCV060-02-24-DRIVE WORK REVERSING GEAR MAIN SHAFT
2	DCV060-02-25A-DRIVE WORK VALVE ROD CENTER LINK
2	DCV060-02-25B-DRIVE WORK CROSS HEAD LINK
1	DCV060-02-26-WATER PUMP ECCENTRIC
1	DCV060-02-27-WATER PUMP ECCENTRIC HOUSING
1	DCV060-02-28-WATER PUMP MAIN SHAFT SPACER
1	DCV060-02-29-WATER PUMP ADJUSTER
1	DCV060-02-30-WATER PUMP YOKE
1	DCV060-02-33-WATER PUMP MAIN LEVER
1	DCV060-02-34-WATER PUMP CENTER LINK
1	DCV060-02-35-WATER PUMP INJECTOR PUMP PISTON
1	DCV060-02-36-WATER PUMP ECCENCTRIC LEVER
1	DCV060-03-01-BOILER
1	DCV060-03-02-BOILER BOTTOM PLATE
1	DCV060-03-03-BOILER BACK HEAD
1	DCV060-03-04-BOILER FIRE BOX SURROUND
1	DCV060-03-05-BOILER FIRE BOX FRONT PLATE
1	DCV060-03-06-BOILER FIRE BOX REAR PLATE
1	DCV060-03-07-BOILER FRONT PLATE
1	DCV060-03-08-BOILER TUBE-15mm
5	DCV060-03-09-BOILER TUBE-8mm

QTY.	PART NUMBER
1	DCV060-03-10-BOILER STEAM DELIVERY TUBE-8mm
10	DCV060-03-11-BOILER RIVET-11mm
30	DCV060-03-12-BOILER STAY RIVET-11mm
6	DCV060-03-13-BOILER RIVET-14mm - Copy
12	DCV060-03-14-BOILER STAY RIVET-14mm - Copy
1	DCV060-03-15-BOILER GRATE
18	DCV060-03-16-BOILER RIVET-3mm
1	DCV060-03-17-BOILER TUBE STEAM DELIVERY TO REGULATOR
1	DCV060-03-18-BOILER CROWN STAY
1	DCV060-03-19-BOILER FIRE HOLE OVAL RING
2	DCV060-03-20-BOILER M8 NUT
1	DCV060-03-21-BOILER STEAM VALVE BODY
1	DCV060-03-22-BOILER STEAM VALVE SPINDLE
2	DCV060-03-23-BOILER M8 CROCKS NUT
1	DCV060-03-24-BOILER STEAM SUPPLY ELBOW
1	DCV060-03-25-BOILER WATER LEVEL INDICATOR GLASS TUBE
2	DCV060-03-26-BOILER WATER LEVEL INDICATOR SEAL
2	DCV060-03-27-BOILER WATER LEVEL INDICATOR FLANGE BODY
2	DCV060-03-28-BOILER WATER LEVEL INDICATOR GLAND
1	DCV060-03-29-BOILER WATER LEVEL INDICATOR TOP GLAND
1	DCV060-03-30-BOILER WATER LEVEL INDICATOR DRAIN BODY
1	DCV060-03-31-BOILER WATER LEVEL INDICATOR DRAIN TAP
6	DCV060-03-32-BOILER WATER LEVEL INDICATOR 6mm GLAND
5	DCV060-03-33-BOILER WATER LEVEL INDICATOR BACK HEAD NIPPLE
2	DCV060-03-34-BOILER WATER LEVEL INDICATOR ELBOW
1	DCV060-03-35-BOILER WATER DRAIN BODY
2	DCV060-03-36-BOILER WATER DRAIN TAP
1	DCV060-03-37-BOILER PRESSURE METER ELBOW
1	DCV060-03-38-BOILER PRESSURE METER
1	DCV060-03-39-BOILER FIRE HOLE DOOR
1	DCV060-03-40-BOILER FIRE HOLE DOORHINGE + PIN
1	DCV060-03-41-BOILER PRESSURE DOME TOP
1	DCV060-03-42-BOILER PRESSURE DOME MANTEL
1	DCV060-03-43-BOILER SAFETY VALVE MANTEL
1	DCV060-03-45-BOILER SAFETY VALVE DOME
4	DCV060-03-46-BOILER STEAM SAFETY VALVE SUPPORT PILLAR
2	DCV060-03-47-BOILER STEAM SAFETY VALVE
2	DCV060-03-48-BOILER SAFETY VALVE BRACKET
2	DCV060-03-49-BOILER SAFETY VALVE SPRING
1	DCV060-03-50-BOILER SMOKE STACK
1	DCV060-03-51-BOILER SMOKE BOX FRONT PLATE
1	DCV060-03-52-SMOKE BOX DOOR HINGE SYSTEM
1	DCV060-03-53-BOILER SMOKE BOX FRONT DOOR
1	DCV060-03-54-BOILER SMOKE BOX FRONT DOOR
1	DCV060-03-55-FIRE DOOR HANDLE
1	DCV060-03-56-BOILER WASHOT WATER DRAIN BODY
1	DCV060-04-01-CABIN FLOOR
1	DCV060-04-02-CABIN CLADDING PLATE
1	DCV060-04-03-CABIN FRONT PLATE
1	DCV060-04-04-CABIN REAR PLATE
2	DCV060-04-05-CABIN WINDOW + SURROUND
1	DCV060-04-06-CABIN UNDER FLOOR REAR ANGLE
1	DCV060-04-07-CABIN UPPER FLOOR REVERSING STAND PLATE
1	DCV060-04-08-CABIN REVERSING HANDLE LINK BAR
1	DCV060-04-09-CABIN REVERSING STAND BRACKET
1	DCV060-04-10-CABIN REVERSING HANDLE
1	DCV060-04-11-CABIN REVERSING STAND HAND WHEEL
1	DCV060-04-12-CABIN REVERSING STAND NUT
2	DCV060-05-01-WATER TANK
2	DCV060-05-02-WATER TANK DRAIN
2	DCV060-05-03-WATER TANK LID

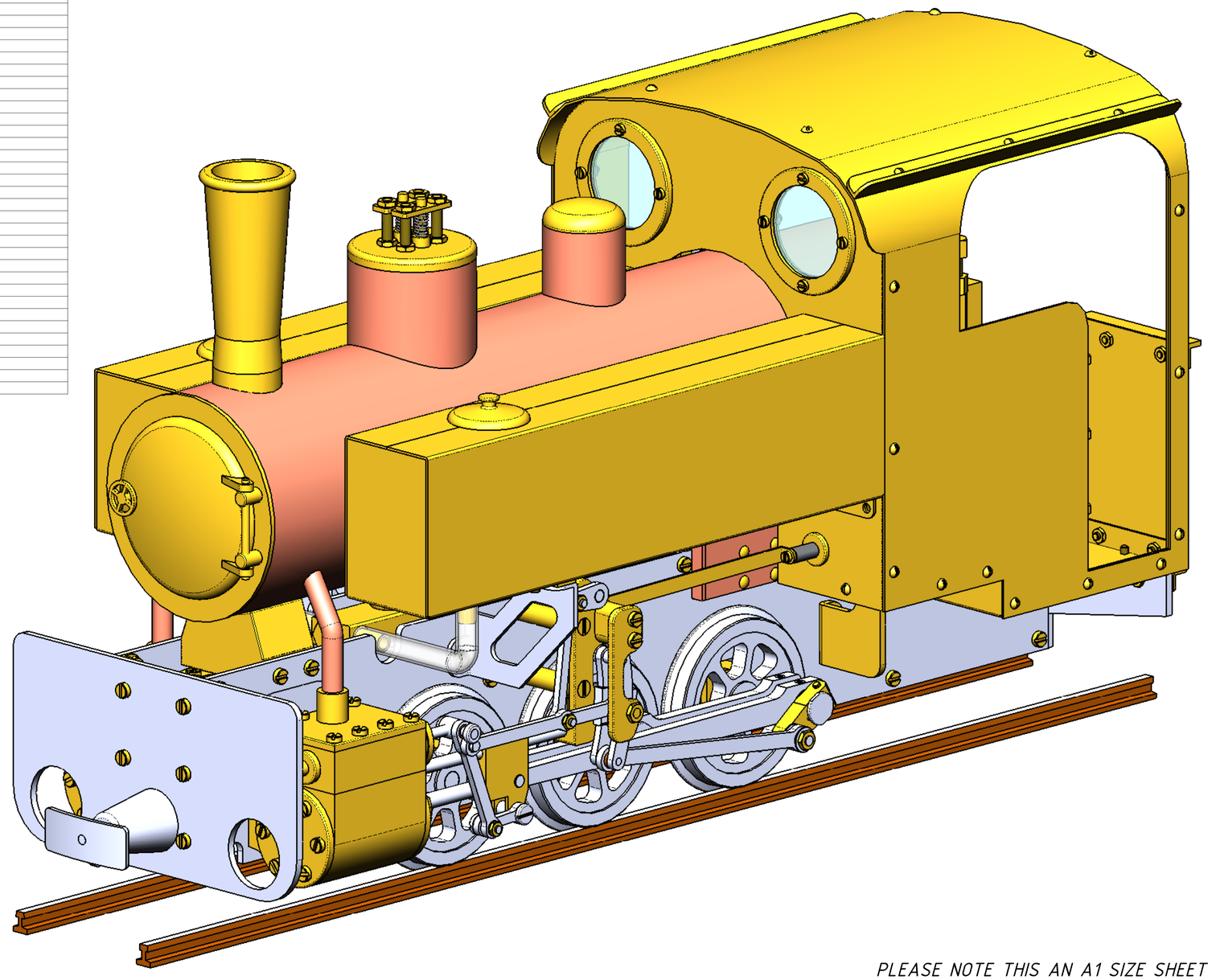

PLEASE NOTE THIS AN A1 SIZE SHEET

TITLE

MODEL STEAM LOCOMOTIVE 060T DECAUVILLE

DRAWING CONTENTS

ISOMETRIC VIEW AND BILL OF MATERIALS

PROJECT No
JDW DRAUGHTING SERVICES
J.A.M. DE WAAL. 12 BRIGHTWELL STREET PAPAKURA 2110.
NEW ZEALAND. PHONE: 0064 09 2988815. MOB: 0211791000
E-MAIL: dewaal@xtra.co.nz.

PROJECTION

SHEET: 02 OF 08

DATE: JUNE 2012

MODEL SCALE: 1:9.45 GAUGE 63.5mm (2.5")

DWG SCALE: NTS @ A1 OR AS SHOWN

Copyright © J.A.M. DE WAAL PAPAKURA NZ

A1 No: DCV060-02

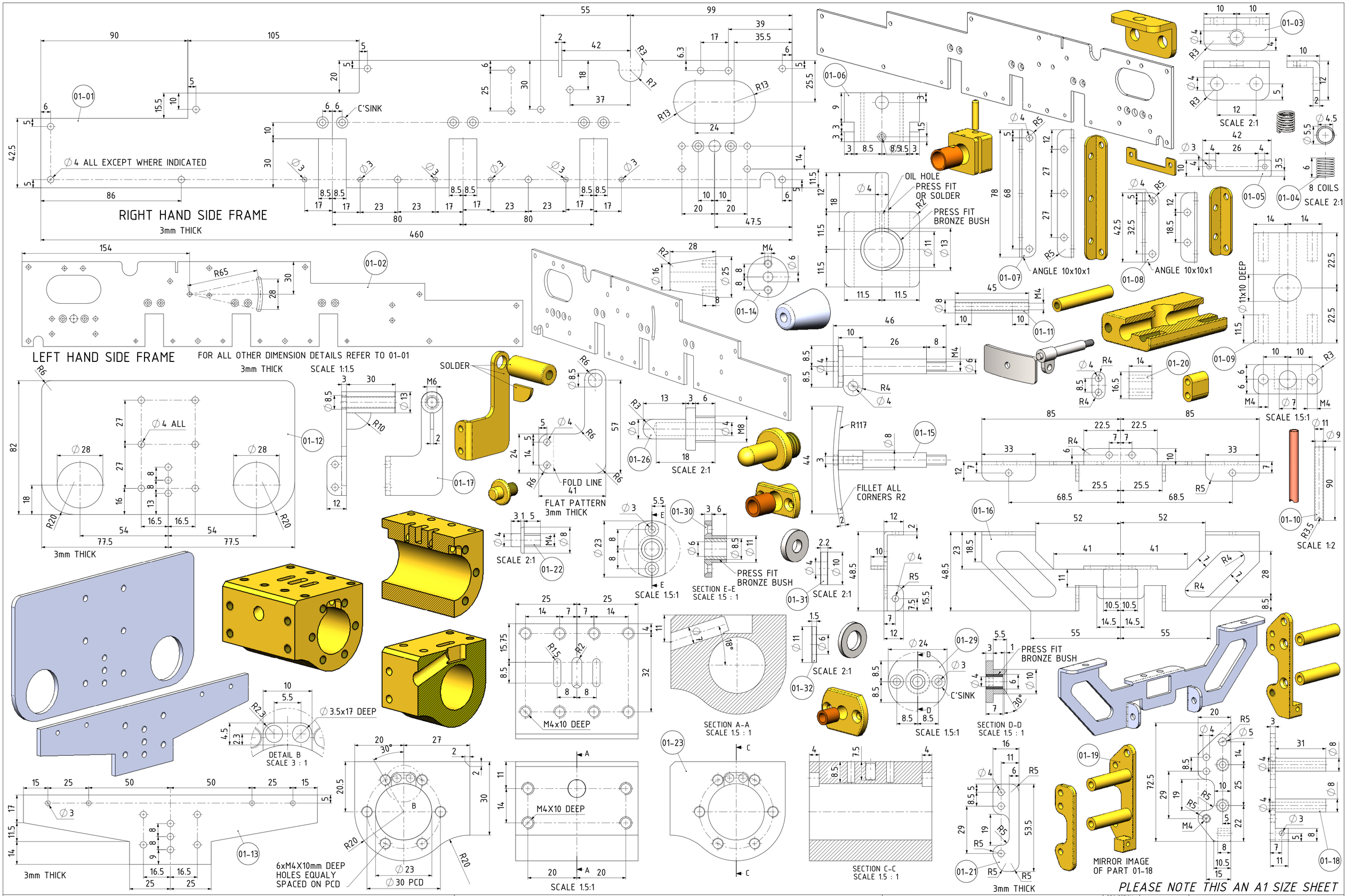

PLEASE NOTE THIS AN A1 SIZE SHEET

TITLE	DRAWING CONTENTS	PROJECT No	PROJECTION	
MODEL STEAM LOCOMOTIVE 060T DECAUVILLE	UNDERFRAME PARTS AND ASSEMBLIES	JDW DRAUGHTING SERVICES J.A.M. DE WAAL. 12 BRIGHTWELL STREET PAPAKURA 2110. NEW ZEALAND. PHONE: 0064 09 2988815. MOB: 0211791000 E-MAIL: dewaal@xtra.co.nz.	SHEET: 03 OF 08 DATE: JUNE 2012	MODEL SCALE: 1:9.45 GAUGE 63.5mm (2.5") DWG SCALE: 1:1 @ A1 OR AS SHOWN Copyright© J.A.M. DE WAAL PAPAKURA NZ A1 No: DCV060-03

01-24
SCALE 1.5:1
01-25
SECTION A-A
SCALE 1.5 : 1
SECTION B-B
SOLDER
01-33
01-34
01-35
01-36
01-37
01-38
01-39
01-40
01-41
11 COILS
SCALE 2:1
SECTION D-D
01-43
1.5mm THICK
SCALE 2:1
6 HOLES EQUALY
SPACED ON PCD
01-27
PRESS FIT
BRONZE
BUSH
01-28
6 HOLES EQUALY
SPACED ON PCD
SCALE 2:1
CLEAR TUBING
01-44
01-45
SECTION C-C
02-01
02-02
SCALE 1.5:1
SPOKE MISSING
02-03
FOR ALL OTHER
DETAILED DIMENSIONS
REFER TO PART 02-02
02-04
UNDER CUT
02-06
02-07
02-08
02-10
02-11
SCALE 2:1
02-12
PRESS FIT
SCALE 1.5:1
02-13
SCALE 2:1
02-14
SCALE 1.5:1
02-15
SCALE 2:1
02-16
SCALE 1.5:1
02-17
PRESS FIT BRONZE BUSHES
02-18
02-19
0.5mm
THICK
02-20
0.5mm
THICK
02-22
02-23
02-24
02-25
DRILL AND PRESS FIT PIN AFTER ASSEMBLY
PRESS FIT AFTER ASSEMBLY
02-25A
02-25B
SCALE 1.5:1
02-27
3mm THICK
02-28
02-29
M6x46 ALLEN
KEY SCREW
02-05
OIL HOLE DRILL AFTER ASSEMBLY
PRESS FIT BRONZE BUSHES
OIL HOLE DRILL AFTER ASSEMBLY
PRESS FIT BRONZE BUSHES
PRESS FIT INTO PART
02-15 AFTER ASSEMBLY
PRESS FIT
BRONZE BUSHES
PRESS FIT
BRONZE BUSH
PRESS FIT
BRONZE
BUSHES
SECTION C-C
SCALE 2 : 1
PRESS FIT
AFTER
ASSEMBLY
PRESS FIT
SECTION B-B
SCALE 1.5 : 1
PRESS FIT
AFTER
ASSEMBLY
02-09

PLEASE NOTE THIS AN A1 SIZE SHEET

TITLE

MODEL STEAM LOCOMOTIVE 060T DECAUVILLE

DRAWING CONTENTS

UNDERFRAME & DRIVEWORK PARTS AND ASSEMBLIES

PROJECT No
JDW DRAUGHTING SERVICES
J.A.M. DE WAAL. 12 BRIGHTWELL STREET PAPAKURA 2110.
NEW ZEALAND. PHONE: 0064 09 2988815. MOB: 0211791000
E-MAIL: dewaal@xtra.co.nz.

PROJECTION

MODEL SCALE: 1:9.45 GAUGE 63.5mm (2.5")
DWG SCALE: 1:1 @ A1 OR AS SHOWN
Copyright© J.A.M. DE WAAL PAPAKURA NZ
SHEET: 04 OF 08
DATE: JUNE 2012
A1 No: DCV060-04

02-26
SCALE 1.5:1
02-32
02-34
3mm THICK
02-30
02-35
02-36
PRESS FIT BRONZE BUSHES
02-33
SECTION A-A
03-01
TOP ONLY
BOTTOM ONLY
03-03
03-12
03-11
03-13
03-14
03-15
03-20
1.5mm THICK
HARD SOLDERED WHEN ASSEMBLED
HARD SOLDER
03-04
03-05
03-06
FOR ALL OTHER DIMENSION DETAILS REFER TO PART 03-05
FOR THIS DETAIL REFER TO 03-05
HOLES TO BE TAKEN OVER FROM PART 03-04
HOLES TO BE TAKEN OVER FROM PART 03-06
HOLES TO BE TAKEN OVER FROM PART 03-05
BEND UP
1mm THICK
HARD SOLDERED WHEN ASSEMBLED
HARD SOLDERED WHEN ASSEMBLED
03-09
ALL COPPER TUBING OD8xID7
ALL PARTS TO BE HARDSOLDERED AFTER ASSEMBLY
SCALE 1:2
03-10
03-02
03-08
ALL HARD SOLDERED
03-18
03-19
03-21
03-17
TUBING 10x8
HARD SOLDERED
SCALE 1:1.5
FLAT PATTERN
SCALE 1:1.5
BEND UP
PLEASE NOTE THIS AN A1 SIZE SHEET

TITLE

MODEL STEAM LOCOMOTIVE 060T DECAUVILLE

DRAWING CONTENTS

DRIVEWORK & BOILER PARTS AND ASSEMBLIES

PROJECT No
JDW DRAUGHTING SERVICES
J.A.M. DE WAAL. 12 BRIGHTWELL STREET PAPAKURA 2110.
NEW ZEALAND. PHONE: 0064 09 2988815. MOB: 0211791000
E-MAIL: dewaal@xtra.co.nz.

PROJECTION

SHEET: 05 OF 08

DATE: JUNE 2012

MODEL SCALE: 1:9.45 GAUGE 63.5mm (2.5")

DWG SCALE: 1:1 @ A1 OR AS SHOWN

Copyright© J.A.M. DE WAAL PAPAKURA NZ

A1 No: DCV060-05

03-22
03-23
03-24
03-25
03-26
03-27
03-28
03-29
03-30
03-31
03-32
03-33
03-34
03-35
03-36
03-37
03-38
03-39
03-40
03-41
03-42
03-43
03-45
03-46
03-47
03-48
03-50
03-51
03-52
03-53
03-54
03-55
03-56
04-01
04-02
04-03
04-04
04-05
04-06
04-08
04-09
04-11
04-12

FERRULE
TUBING 6x5
FERRULE
RUBBER
GLASS
FERRULE
TUBING 4x3
0-5BAR (0-70PSI) PRESSURE GAUGE
SECTION A-A
HARD SOLDER
SECTION B-B
SCALE 1.5:1
FLEXIBLE TUBING
HARD SOLDER RING FROM INSIDE
TUBING 4x3
FERRULE
SOLDER
HARD SOLDER RING FROM INSIDE
SCALE 1.5:1
2mm THICK
FOR OTHER DIMENSION DETAILS REFER TO PART 03-35
NOTE IF M7 IS NOT AVAILABLE THAN 9/32" CAN BE USED
FLAT PATTERN SCALE 1:2 1mm THICK
NOTE 1
C'SINK
180 MAX
SCALE 1:2
NOTE 1
ANGLE 10x10x2
180 MAX
SCALE 1:2
NOTE 1:ALL HOLES ON THE FOLDED RIM TO BE TAKEN OVER FROM PART 04-02
ANGLE 9x9x1.5
180 MAX
SCALE 1:2
SCALE 2:1
3mm THICK
PLEASE NOTE THIS AN A1 SIZE SHEET

BEND UP
BEND DOWN

TITLE
MODEL STEAM LOCOMOTIVE 060T DECAUVILLE

DRAWING CONTENTS
BOILER & DRIVERS CABIN PARTS AND ASSEMBLIES

PROJECT No
JDW DRAUGHTING SERVICES
J.A.M. DE WAAL. 12 BRIGHTWELL STREET PAPAKURA 2110.
NEW ZEALAND. PHONE: 0064 09 2988815. MOB: 0211791000
E-MAIL: dewaal@xtra.co.nz.

PROJECTION

SHEET: 06 OF 08

DATE: JUNE 2012

MODEL SCALE: 1:9.45 GAUGE 63.5mm (2.5")

DWG SCALE: 1:1 @ A1 OR AS SHOWN

Copyright © J.A.M. DE WAAL PAPAKURA NZ

A1 No: DCV060-06

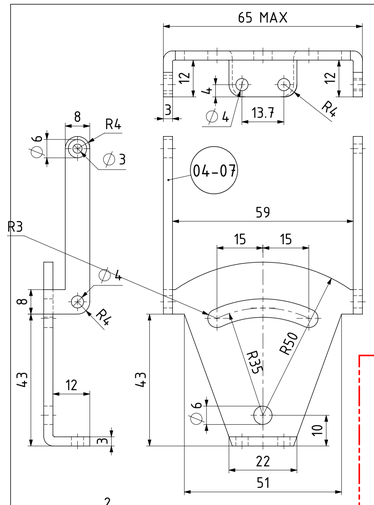

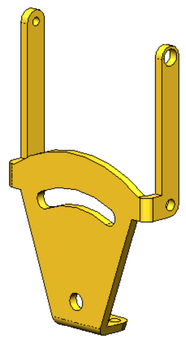

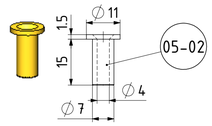

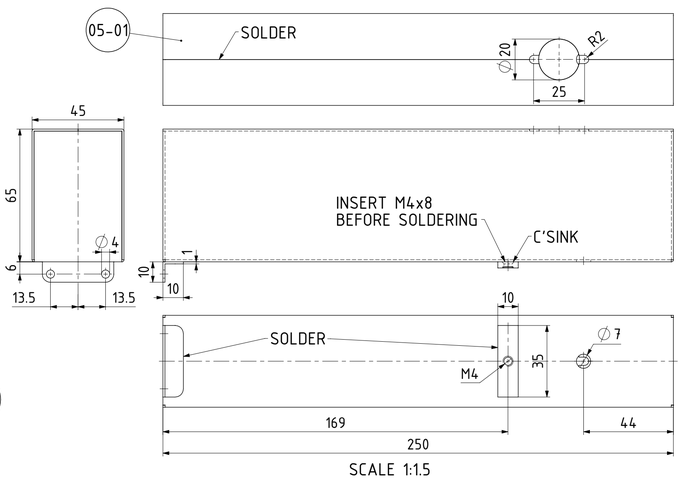

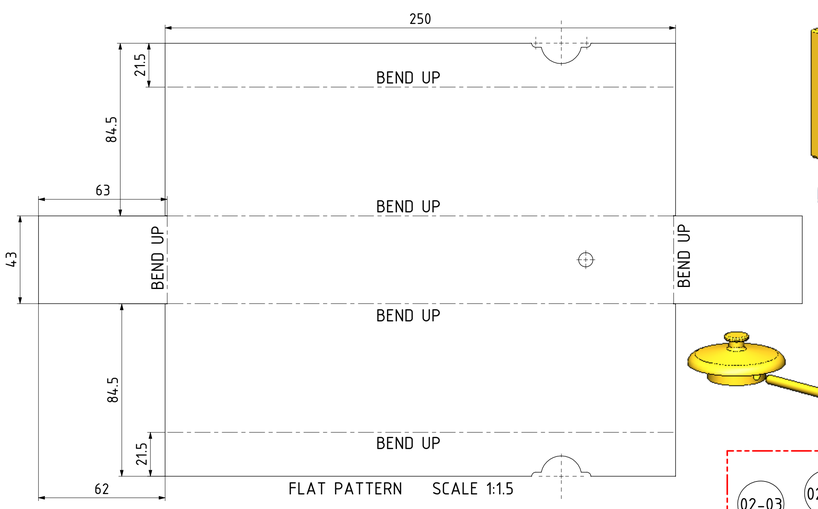

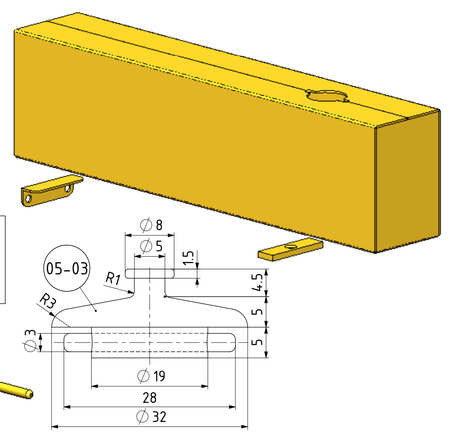

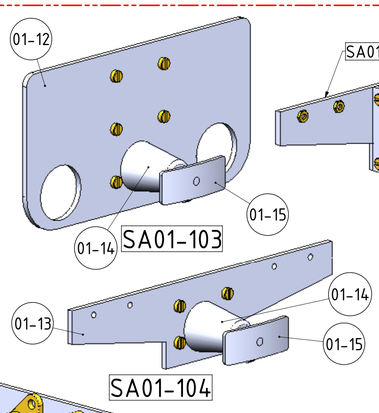

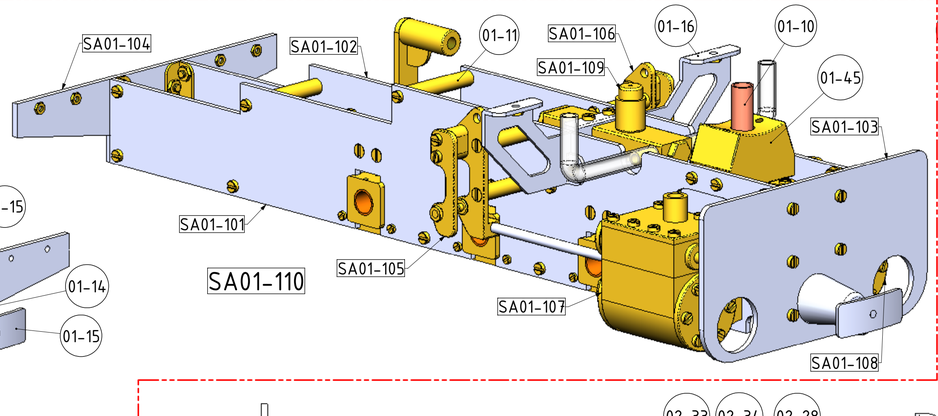

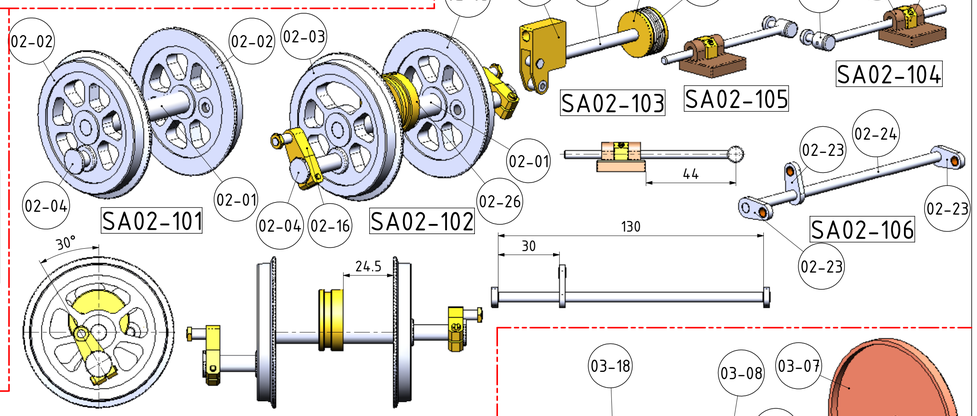

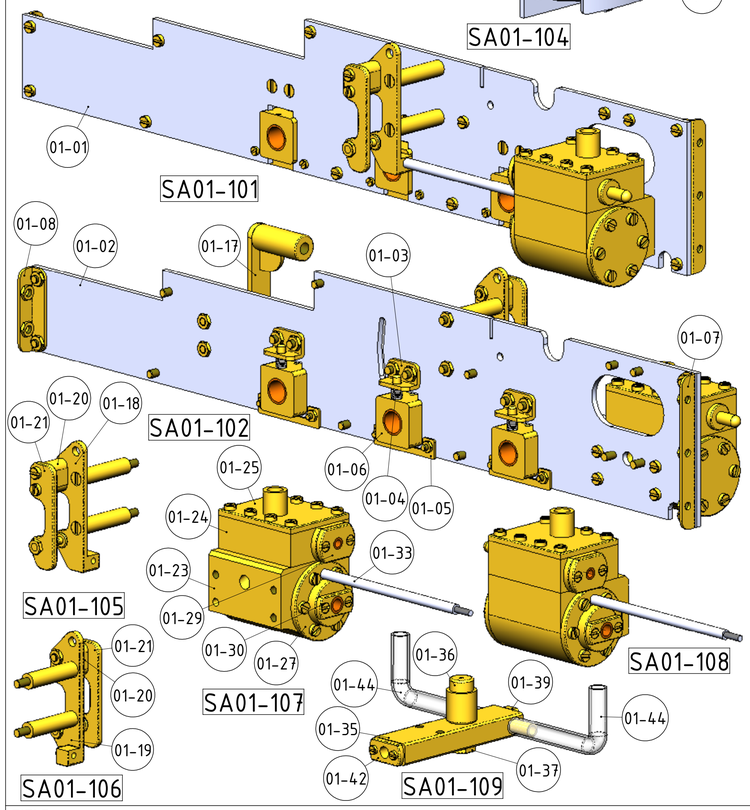

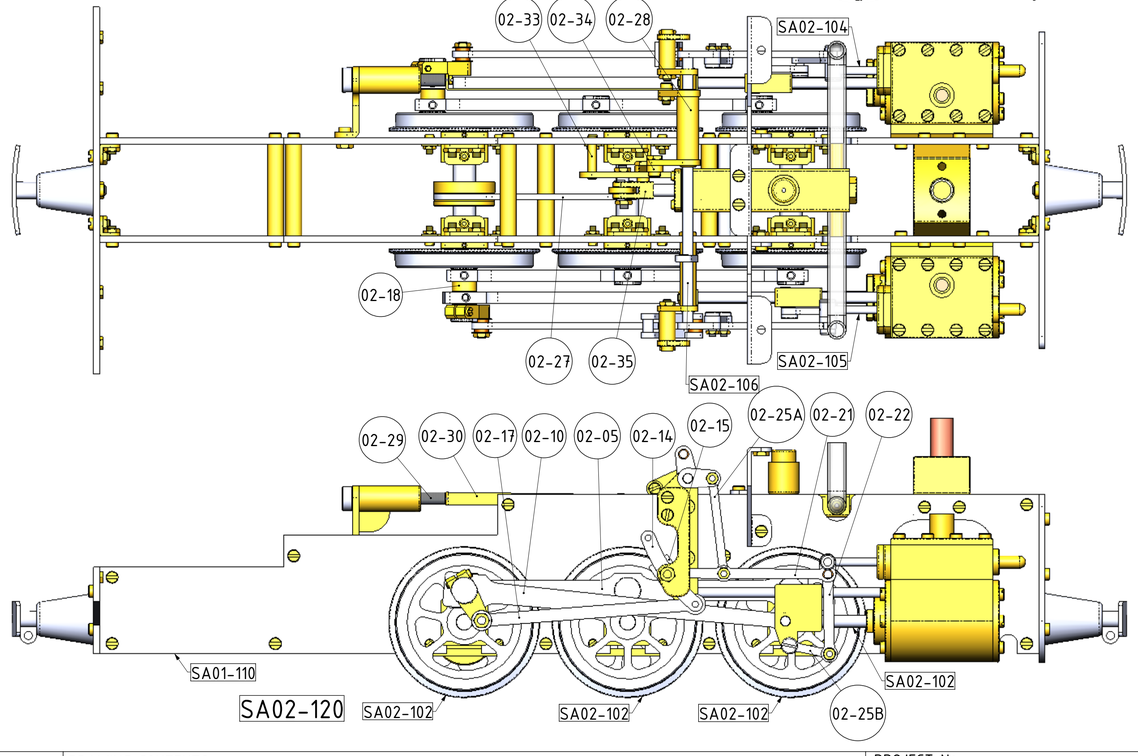

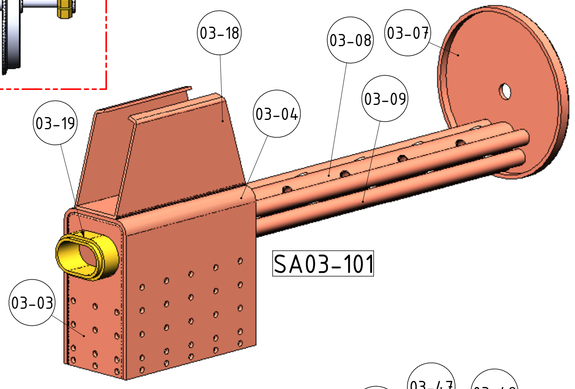

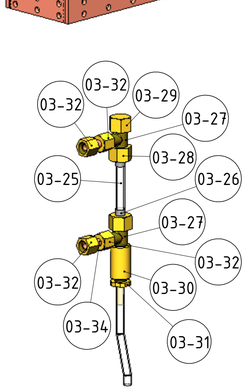

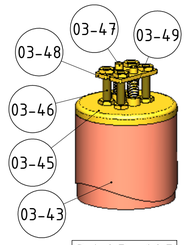

PLEASE NOTE THIS AN A1 SIZE SHEET

TITLE

MODEL STEAM LOCOMOTIVE 060T DECAUVILLE

DRAWING CONTENTS

DRIVERS CABIN & WATER TANK PARTS AND ASSEMBLIES + TOTAL SUB-ASSEMBLIES

PROJECT No
JDW DRAUGHTING SERVICES
J.A.M. DE WAAL. 12 BRIGHTWELL STREET PAPAKURA 2110.
NEW ZEALAND. PHONE: 0064 09 2988815. MOB: 0211791000
E-MAIL: dewaal@xtra.co.nz.

PROJECTION

SHEET: 07 OF 08

DATE: JUNE 2012

MODEL SCALE: 1:9.45 GAUGE 63.5mm (2.5")

DWG SCALE: 1:1 @ A1 OR AS SHOWN

Copyright© J.A.M. DE WAAL PAPAKURA NZ

A1 No: DCV060-07

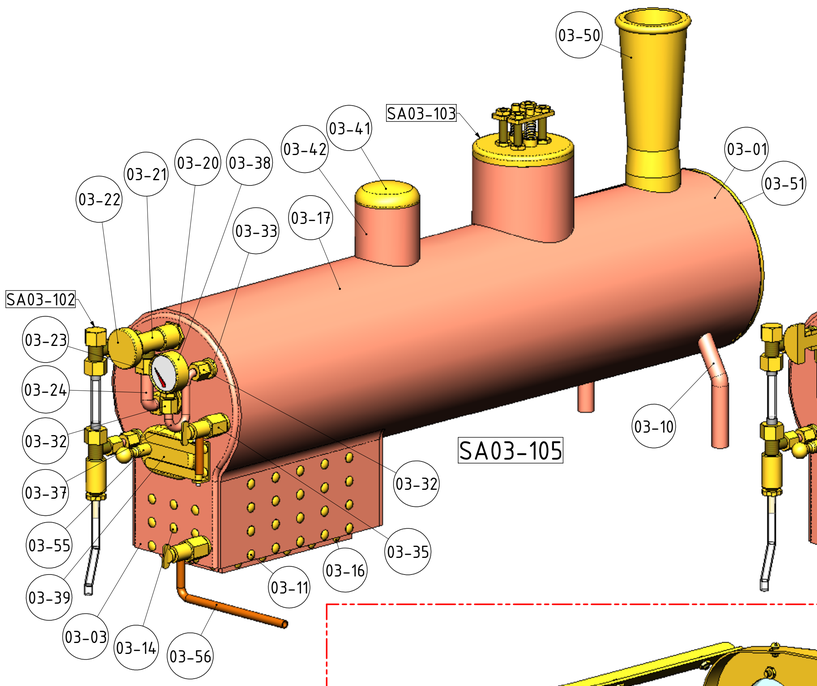

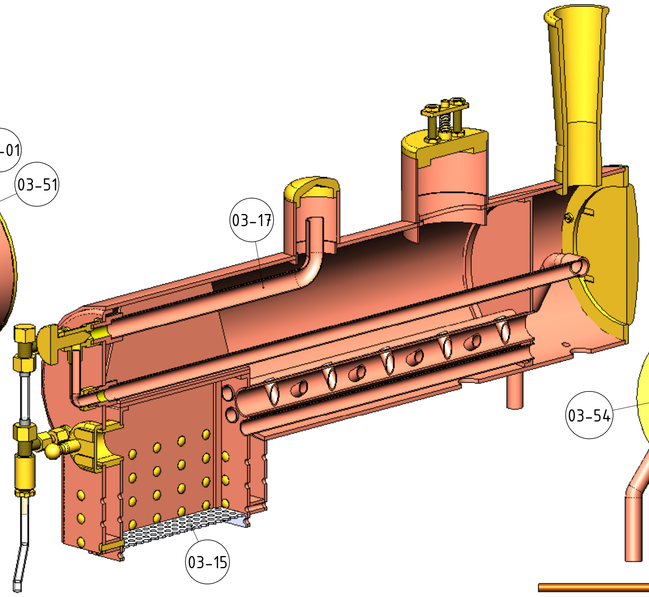

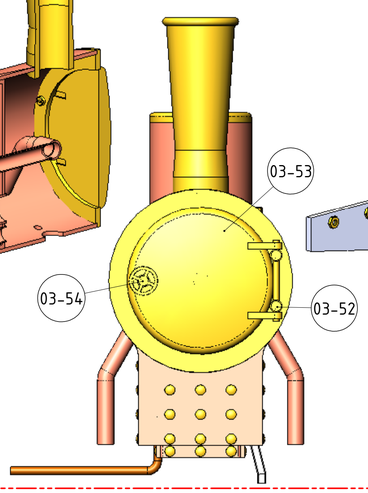

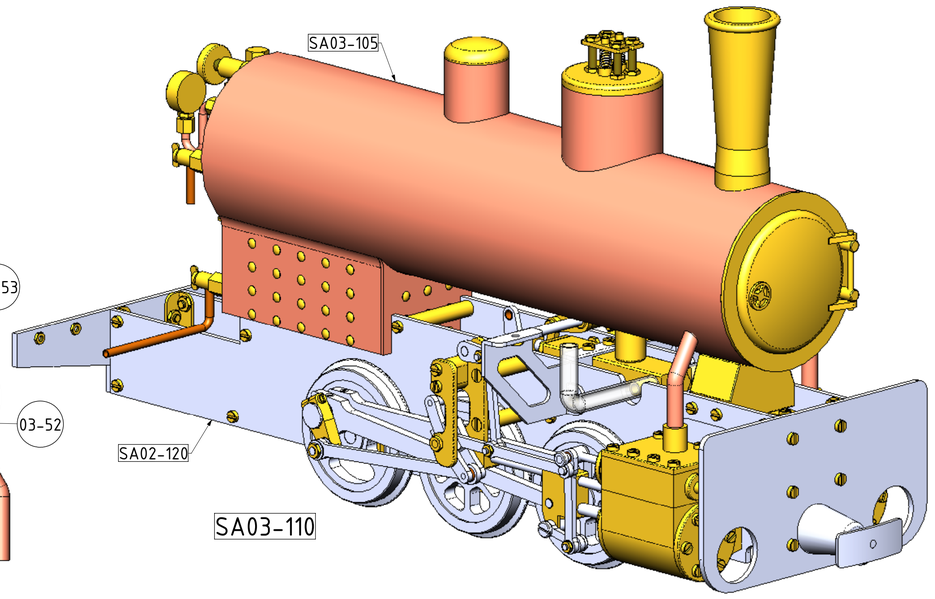

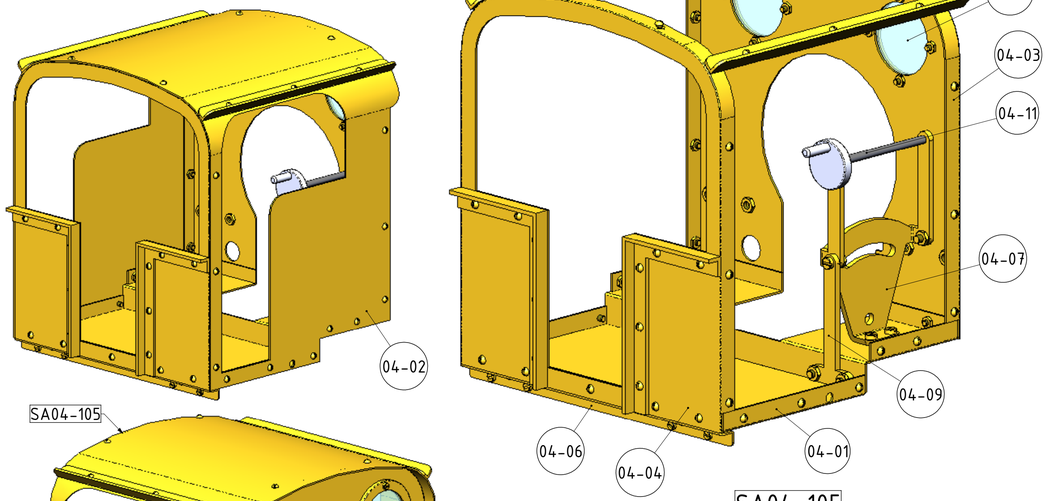

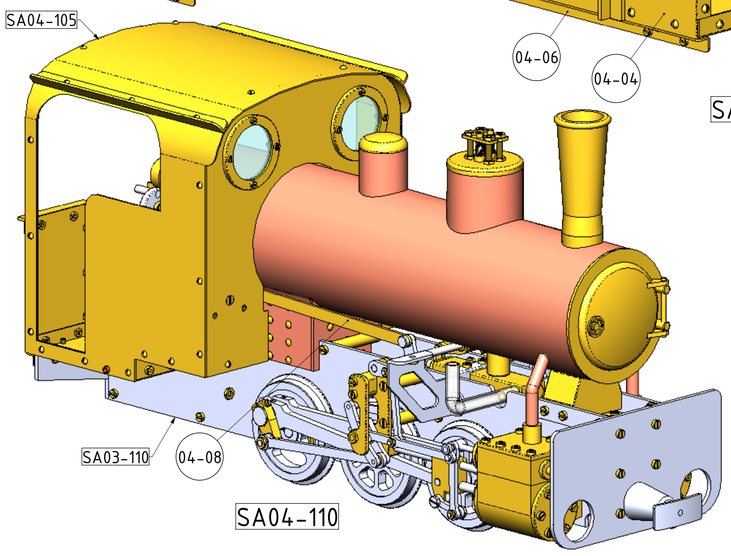

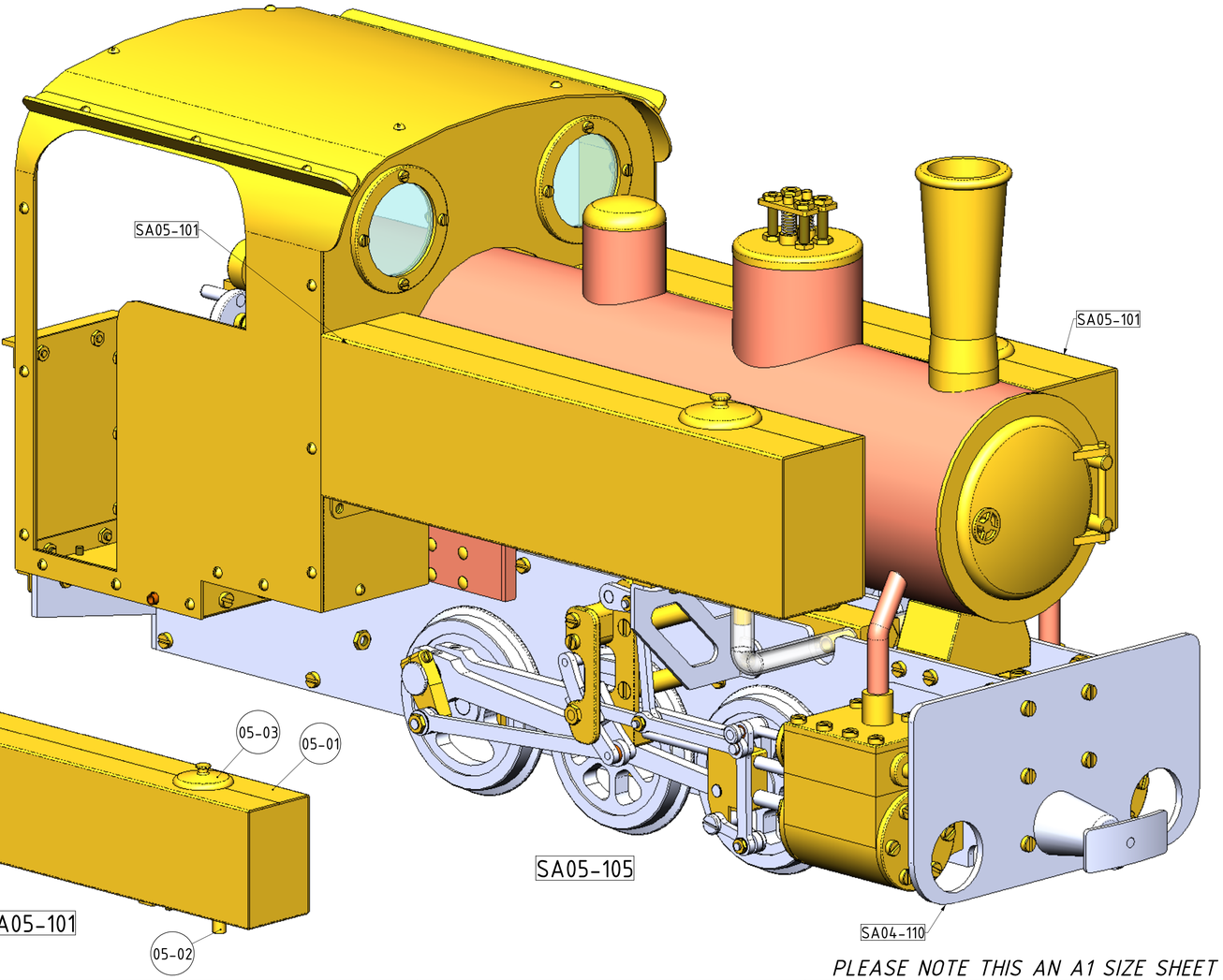

PLEASE NOTE THIS AN A1 SIZE SHEET

TITLE

MODEL STEAM LOCOMOTIVE 060T DECAUVILLE

DRAWING CONTENTS

TOTAL SUB-ASSEMBLIES

PROJECT No
JDW DRAUGHTING SERVICES
J.A.M. DE WAAL. 12 BRIGHTWELL STREET PAPAKURA 2110.
NEW ZEALAND. PHONE: 0064 09 2988815. MOB: 0211791000
E-MAIL: dewaal@xtra.co.nz.

PROJECTION

SHEET: 08 OF 08

DATE: JUNE 2012

MODEL SCALE: 1:9.45 GAUGE 63.5mm (2.5")

DWG SCALE: 1:1 @ A1 OR AS SHOWN

Copyright© J.A.M. DE WAAL PAPAKURA NZ

A1 No: DCV060-08