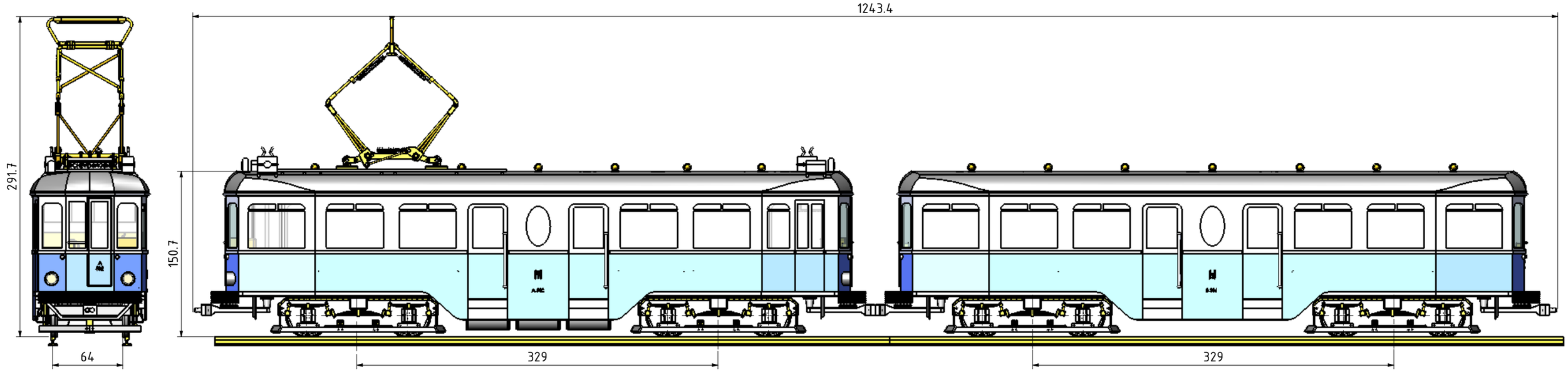

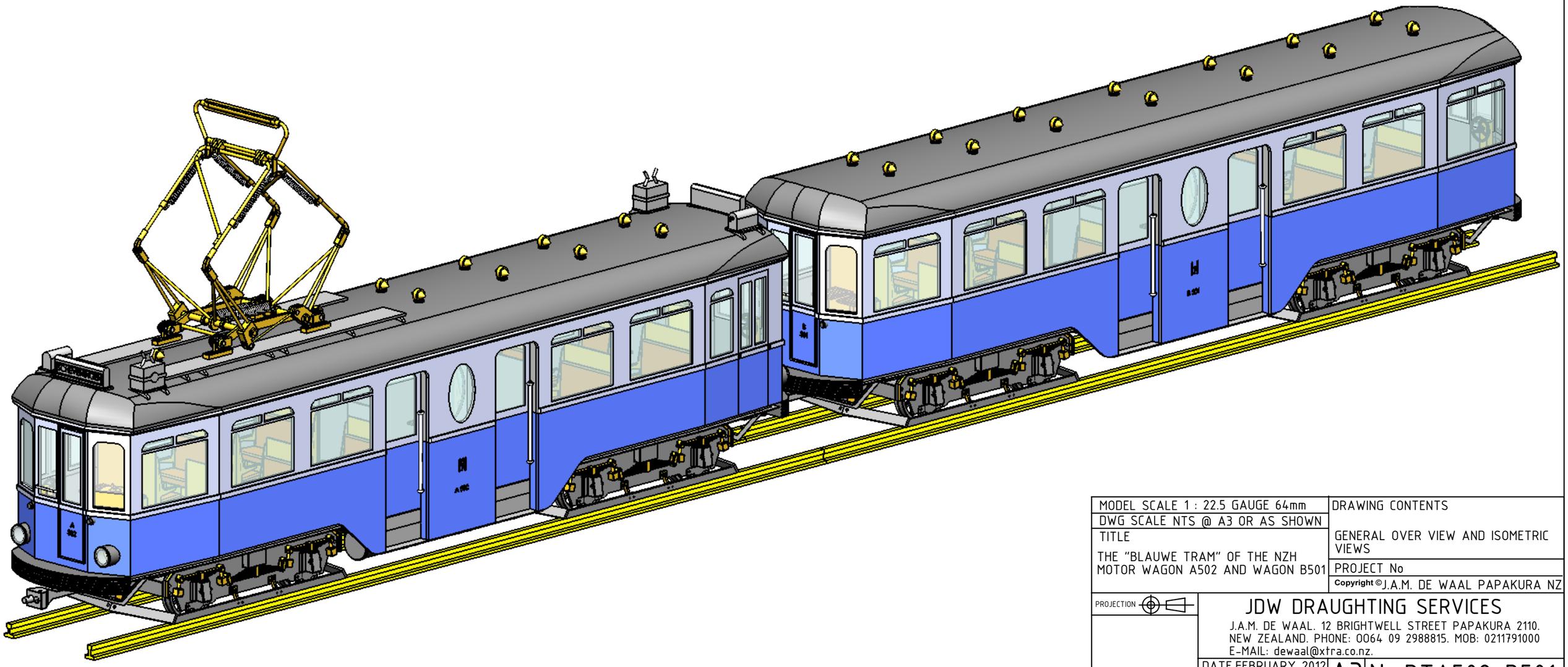

NOTES

MODEL SCALE 1 : 22.5 GAUGE 64mm	DRAWING CONTENTS
DWG SCALE NTS @ A3 OR AS SHOWN	
TITLE THE "BLAUWE TRAM" OF THE NZH MOTOR WAGON A502 AND WAGON B501	GENERAL OVER VIEW AND ISOMETRIC VIEWS
	PROJECT No
	Copyright © J.A.M. DE WAAL PAPAKURA NZ

PROJECTION

JDW DRAUGHTING SERVICES
J.A.M. DE WAAL. 12 BRIGHTWELL STREET PAPAKURA 2110.
NEW ZEALAND. PHONE: 0064 09 2988815. MOB: 0211791000
E-MAIL: dewaal@xtra.co.nz.

DATE FEBRUARY 2012	A3	No:BTA502-B501
SHEET 01 OF 10		

QTY.	PART NUMBER
8	BTA502-001-BOGIE SIDE FRAME
8	BTA502-002-BOGIE SIDE FRAME ANGLE
8	BTA502-003-BOGIE SIDE FRAME ANGLE
8	BTA502-004-BOGIE CROSS BRACE
16	BTA502-005-BOGIE AXLE BOX
16	BTA502-006 BOGIE AXLE BOX LEAF SPRING
16	BTA502-007-BOGIE OUTER LEAF SPRING HOLDER
8	BTA502-008-BOGIE INNER LEAF SPRING HOLDER
8	BTA502-008-BOGIE INNER LEAF SPRING HOLDER
16	BTA502-009-BOGIE CENTER LEAF SPRING STRAP
8	BTA502-010-BOGIE CENTER LEAF SPRING
16	BTA502-011-BOGIE WHEEL
8	BTA502-012-BOGIE WHEEL AXLE
16	BTA502-013-BOGIE AXLE BOX RETAINER
4	BTA502-014-BOGIE PIVOT BEAM
16	BTA502-015-BOGIE SIDE SKIRTING HOLDING BRACKET
8	BTA502-016-BOGIE FRONT SKIRTING HOLDING BRACKET
4	BTA502-017-BOGIE SKIRTING
1	BTA502-021-BOTTOM FRAME WORK
4	BTA502-022-BUMPER
1	BTA502-023-FLOOR PLATE
2	BTA502-025-INTERNAL PARTITION
2	BTA502-026-SLIDING DOOR COVER
2	BTA502-027-STEPS
1	BTA502-028-ROOF
10	BTA502-029-LARGE SIDE WINDOWS
2	BTA502-030-SMALL SIDE WINDOWS
4	BTA502-031-SMALL FRONT SIDE WINDOWS
2	BTA502-032-SMALL FRONT WINDOWS
4	BTA502-033-OVAL SIDE WINDOWS
2	BTA502-034-FRONT EM EXIT DOOR
2	BTA502-035-SIDE EM EXIT DOOR
4	BTA502-036-SLIDING DOORS
1	BTA502-037-PANTOGRAPH PLATFORM
4	BTA502-038-HEAD LAMP
10	BTA502-039-AIR VENTS
2	BTA502-040 CABLE BOX
2	BTA502-041 CAPACITOR BOX
2	BTA502-042-DESTINATION SIGN
2	BTA502-043-BRACING ANGLE
2	BTA502-044-COUPLING
4	BTA502-045 COUPLING GUIDE RING
2	BTA502-046-COUPLING PIVOT BRACKET
2	BTA502-047-CONTROL CABINET
2	BTA502-048-HAND BRAKE
14	BTA502-049-FOLDING SEATS
8	BTA502-050-SINGLE SEAT
10	BTA502-051-TWIN SEAT
4	BTA502-052 SIDE HAND RAIL
2	BTA502-053-FRONT WINDOW HANDLE
2	BTA502-054-BALCONY HAND RAIL
1	BTA502-055-COMPRESSED AIR CONTAINERS
1	BTA502-070-TOP WAGON BODY
1	BTA502-071-BOTTOM WAGON BODY
2	BTA502-099-RAILS
1	BTB501-081-BOTTOM FRAME WORK
1	BTB501-083-FLOOR PLATE
2	BTB501-085-INTERNAL PARTITION
2	BTB501-086-SLIDING DOOR COVER
2	BTB501-087-STEPS
1	BTB501-088-ROOF
12	BTB501-089-LARGE SIDE WINDOWS
4	BTB501-091-SMALL FRONT SIDE WINDOWS
2	BTB501-092-SMALL FRONT WINDOWS
4	BTB501-093-OVAL SIDE WINDOWS
2	BTB501-094-FRONT EM EXIT DOOR
4	BTB501-096-SLIDING DOORS
14	BTB501-099-AIR VENTS
2	BTB501-103-BRACING ANGLE
2	BTB501-104-COUPLING
2	BTB501-106-COUPLING PIVOT BRACKET
2	BTB501-108-HAND BRAKE
16	BTB501-109-FOLDING SEATS
8	BTB501-110-SINGLE SEAT
6	BTB501-111-TWIN SEAT
4	BTB501-112 SIDE HAND RAIL
2	BTB501-113-FRONT WINDOW HANDLE
2	BTB501-114-BALCONY HAND RAIL
1	BTB501-130-TOP WAGON BODY
1	BTB501-131-BOTTOM WAGON BODY

QTY.	PART NUMBER
4	NZH-02-FOOT
2	NZH-03-BASE SIDE FRAME
8	NZH-04-ISOLATOR
4	NZH-05-ISOLATOR PIN
2	NZH-06-SPACE BAR
2	NZH-07-SPINDLE
2	NZH-08-CENTER DISC
4	NZH-09-SPRING CRANK
2	NZH-10-STAY BLOCK TYPE-1
2	NZH-11-STAY BLOCK TYPE-2
8	NZH-12-BOTTOM STAY
4	NZH-13-HINGE BLOCK
2	NZH-14-CENTER STAY
4	NZH-15-ELBOW HINGE PIN
4	NZH-16-STAY RESTRAINER PIN
2	NZH-17- STAY RESTRAINER
2	NZH-18A-SPRING
4	NZH-18B-SPRING ENDS
2	NZH-19A-TOP STAY
2	NZH-19B-TOP STAY
4	NZH-20-TOP STAY ELBOW HINGE
8	NZH-22-TOP HINGE
4	NZH-23-TOP STAY SPRING HOLDER
1	NZH-24-COLLECTOR CONTACT HOLDER
2	NZH-25-COLLECTOR CONTACT SUPPORT
2	NZH-26-TOP SPRING HOLDER BRACKET
1	NZH-27-TOP SPRING HOLDER SHAFT
2	NZH-28-TOP SPRING HOLDER BUSH
2	NZH-29-TOP SPRING HOLDER CENTER
2	NZH-31A-TOP SPRING BODY
2	NZH-31B-TOP SPRING BODY
4	NZH-32A-TOP SPRING HOOK
4	NZH-32B-TOP SPRING HOOK
1	NZH-33-COLLECTOR
4	NZH-M3 NUT

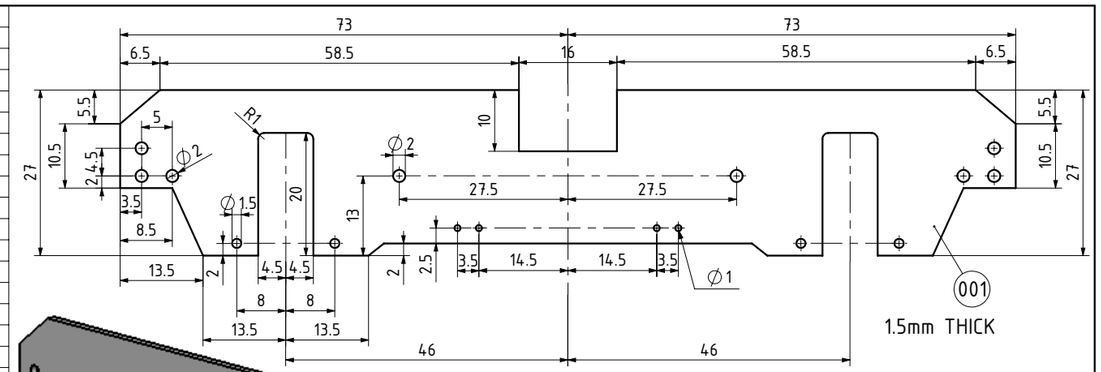

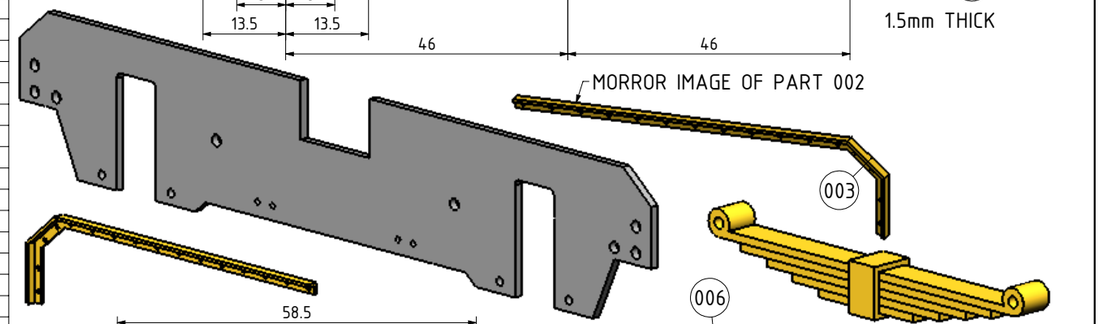

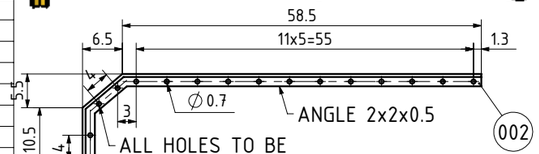

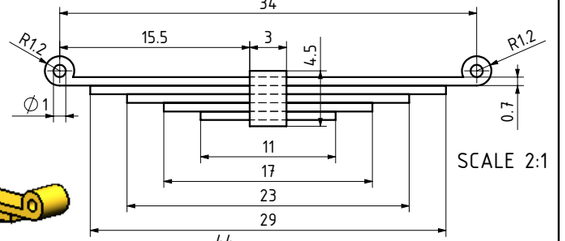

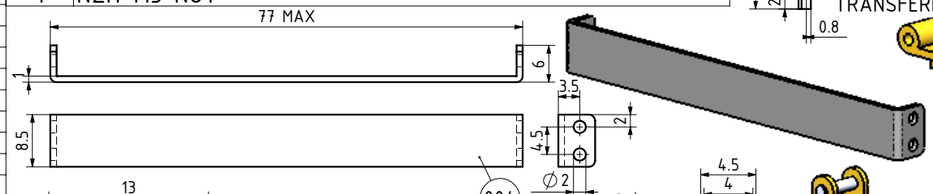

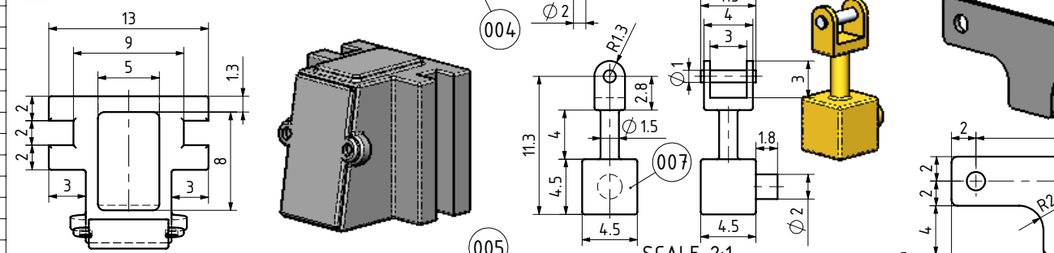

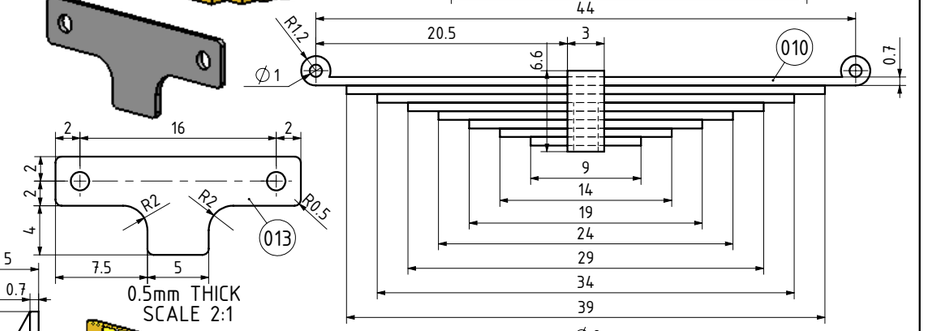

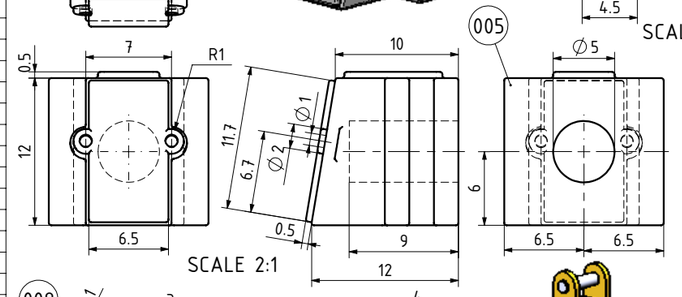

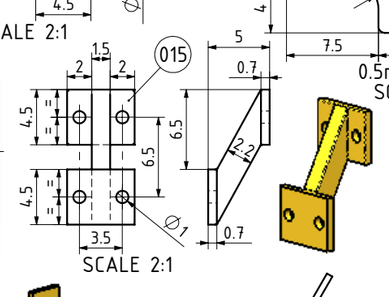

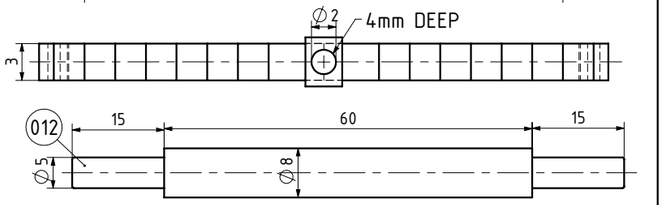

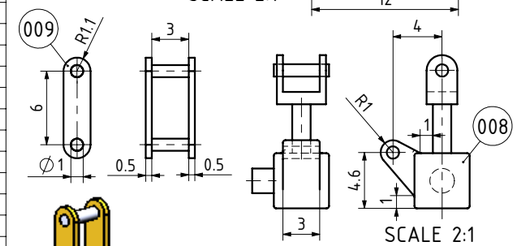

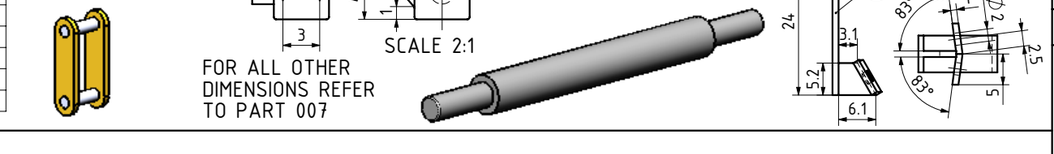

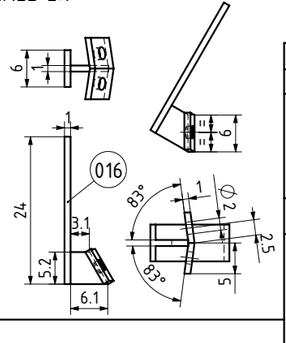

MODEL SCALE 1 : 22.5 GAUGE 64mm	DRAWING CONTENTS
DWG SCALE 1:1 @ A3 OR AS SHOWN	PARTSLIST, BOGIE PARTS & ASSEMBLIES
TITLE THE "BLAUWE TRAM" OF THE NZH MOTOR WAGON A502 AND WAGON B501	PROJECT No
	Copyright © J.A.M. DE WAAL PAPAKURA NZ

PROJECTION

JDW DRAUGHTING SERVICES
J.A.M. DE WAAL. 12 BRIGHTWELL STREET PAPAKURA 2110.
NEW ZEALAND. PHONE: 0064 09 2988815. MOB: 0211791000
E-MAIL: dewaal@xtra.co.nz.

DATE FEBRUARY 2012 | SHEET 02 OF 10 | A3 | No:BTA502-B501

NOTES

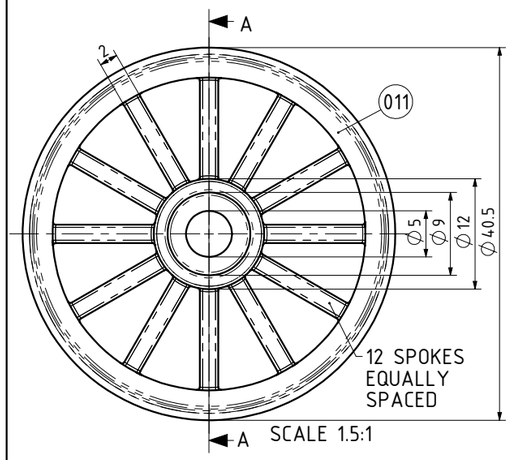

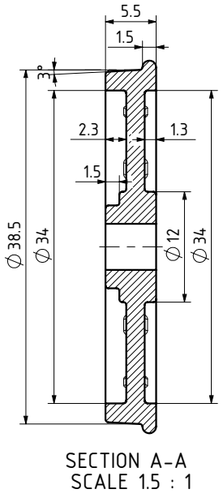

SECTION A-A
SCALE 1.5 : 1

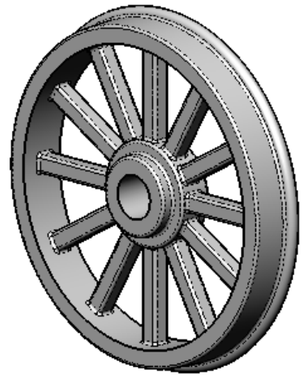

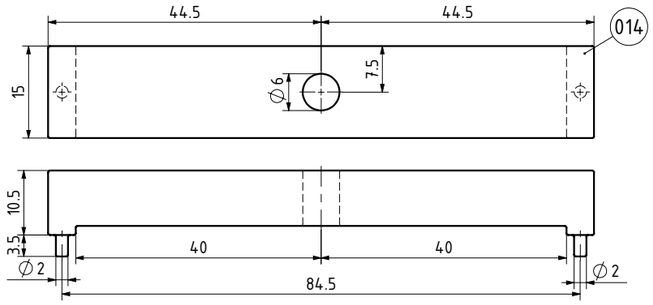

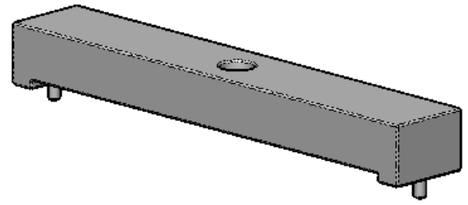

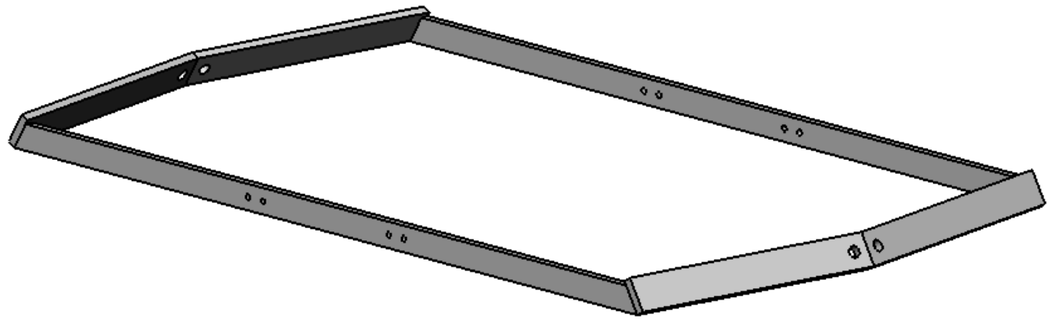

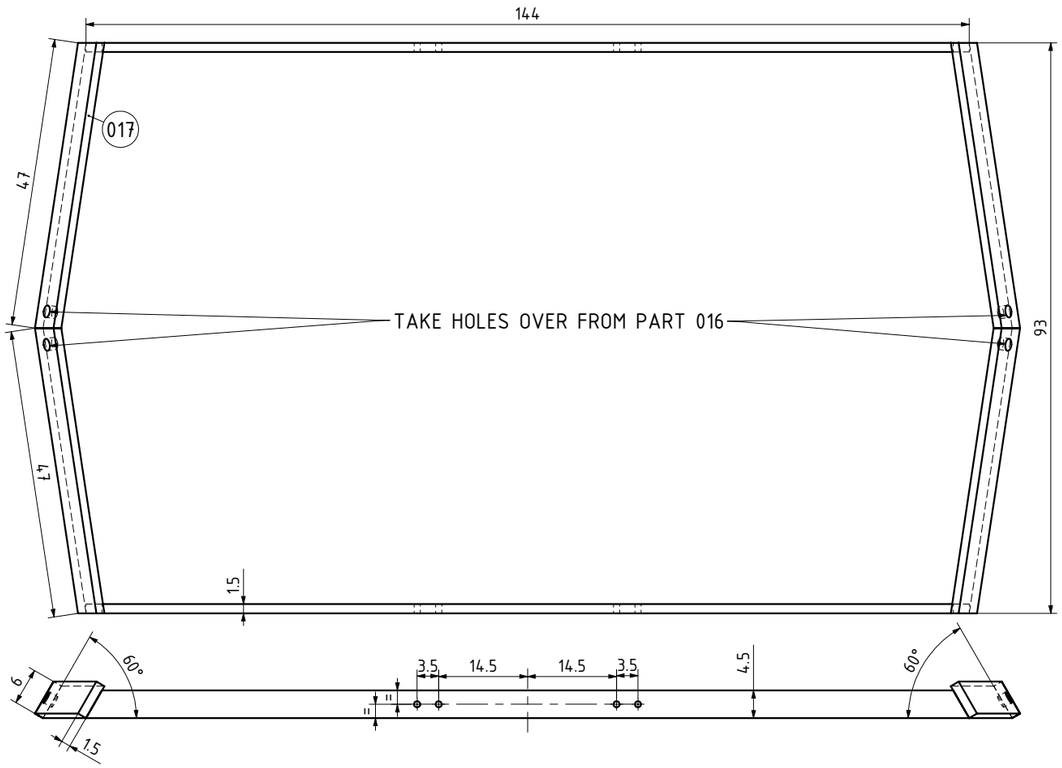

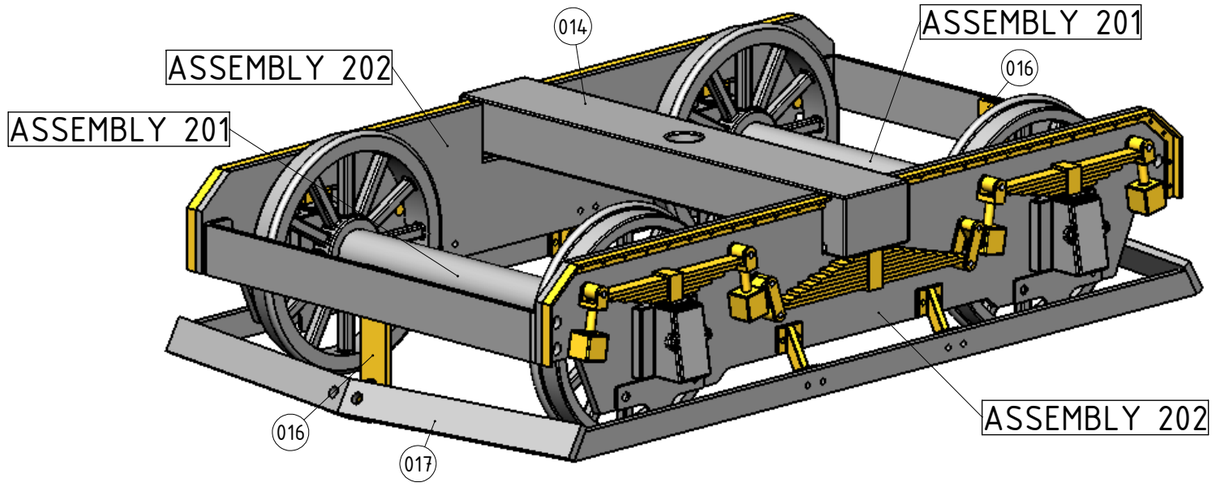

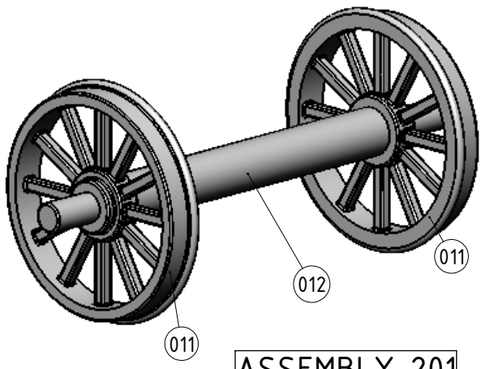

ASSEMBLY 201

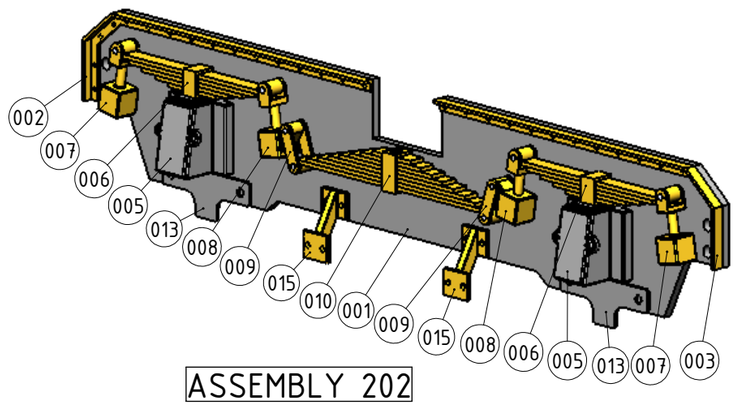

ASSEMBLY 202

NOTES

MODEL SCALE 1 : 22.5 GAUGE 64mm	DRAWING CONTENTS
DWG SCALE 1:1 @ A3 OR AS SHOWN	BOGIE PARTS & ASSEMBLIES
TITLE THE "BLAUWE TRAM" OF THE NZH MOTOR WAGON A502 AND WAGON B501	PROJECT No
	Copyright © J.A.M. DE WAAL PAPAKURA NZ

PROJECTION

JDW DRAUGHTING SERVICES
J.A.M. DE WAAL. 12 BRIGHTWELL STREET PAPAKURA 2110.
NEW ZEALAND. PHONE: 0064 09 2988815. MOB: 0211791000
E-MAIL: dewaal@xtra.co.nz.

DATE FEBRUARY 2012
SHEET 03 OF 10

A3 No:BTA502-B501

548
205
70
135
69
46
23
RHS 8x5x0.5
021
U-12x8x1
ALL BEAMS MARKED "A"
ARE: U-8x4x4x0.5
RHS 3.5x3x0.5
72.5
SCALE 1:1:5
027
AGLE 10.5x7.5x0.5
138
022
030
031
032
033
038
023
REFER
TO PART
030 FOR
THICKNES
CLEAR LENS
0.5mm THICK
SCALE 1.5:1
SCALE 1:2
NOTES

MODEL SCALE 1 : 22.5 GAUGE 64mm	DRAWING CONTENTS
DWG SCALE 1:1 @ A3 OR AS SHOWN	MOTOR WAGON A502 PARTS & ASSEMBLIES
TITLE THE "BLAUWE TRAM" OF THE NZH MOTOR WAGON A502 AND WAGON B501	PROJECT No
	Copyright © J.A.M. DE WAAL PAPAKURA NZ

PROJECTION

JDW DRAUGHTING SERVICES
J.A.M. DE WAAL. 12 BRIGHTWELL STREET PAPAKURA 2110.
NEW ZEALAND. PHONE: 0064 09 2988815. MOB: 0211791000
E-MAIL: dewaal@xtra.co.nz.

DATE FEBRUARY 2012
SHEET 04 OF 10
A3 No:BTA502-B501

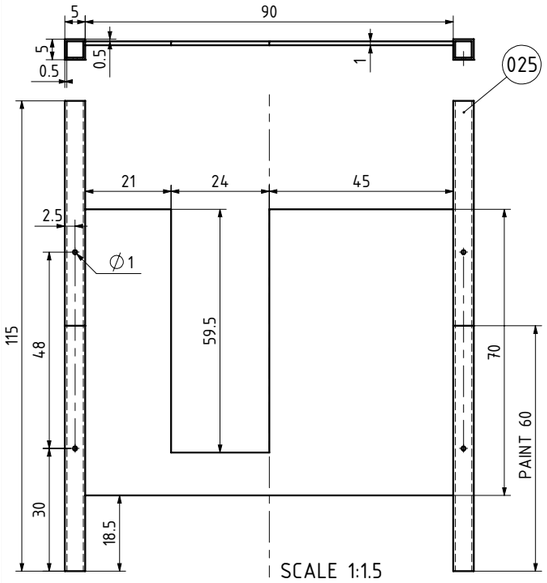

SCALE 1:1.5

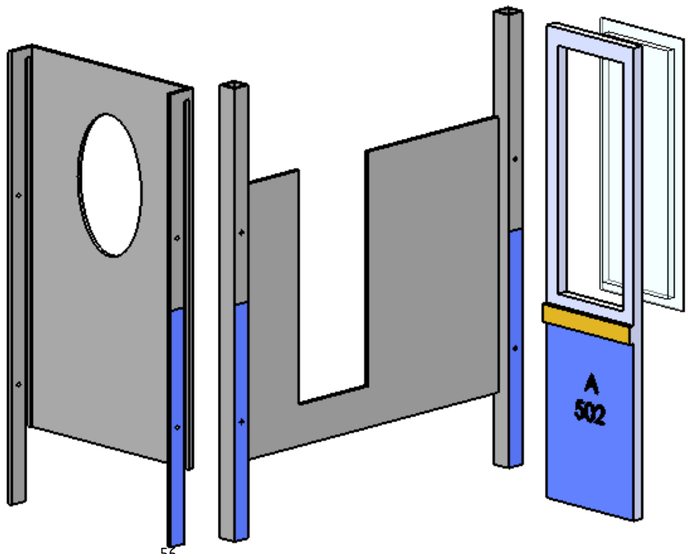

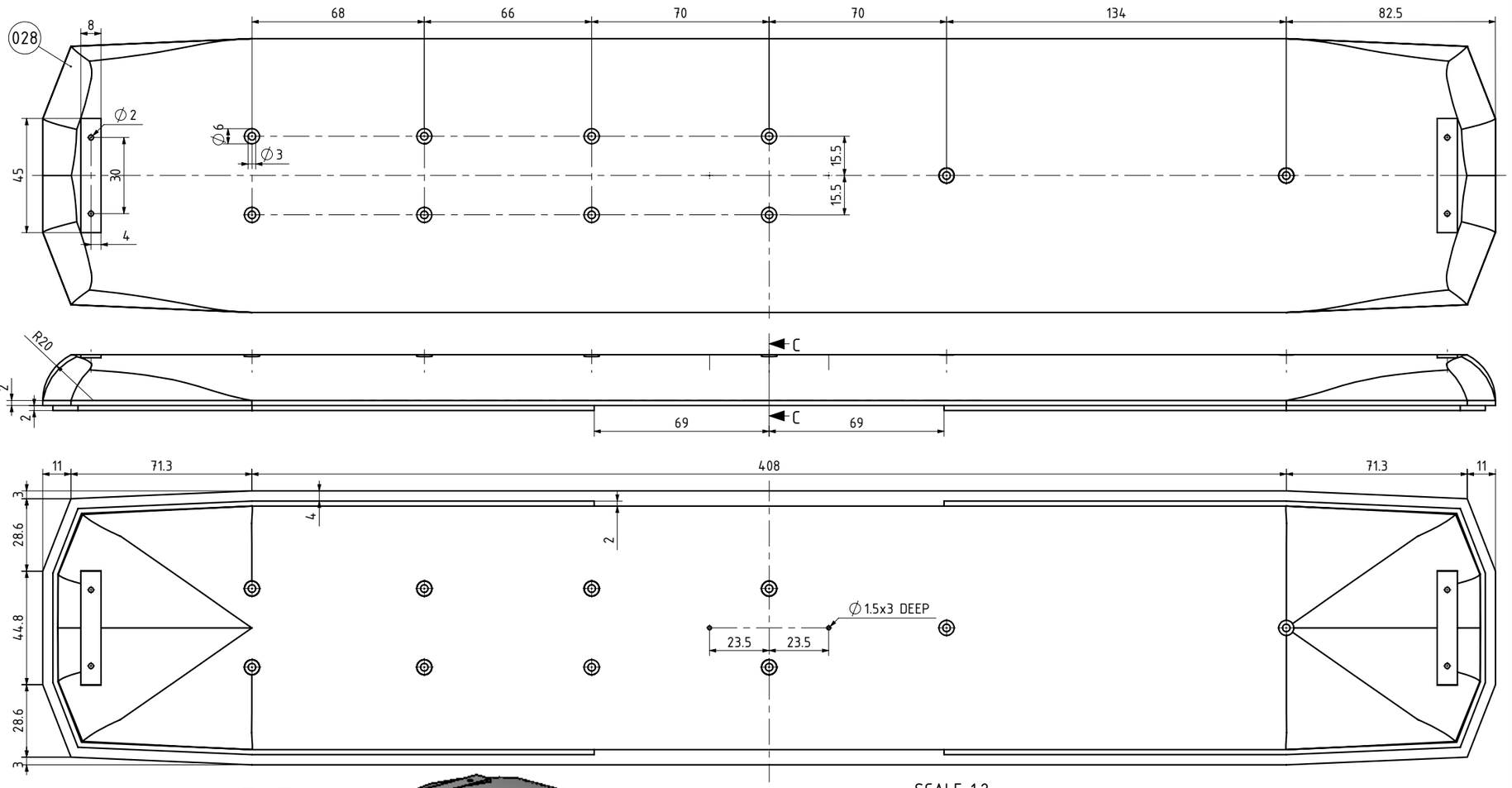

SCALE 1:2



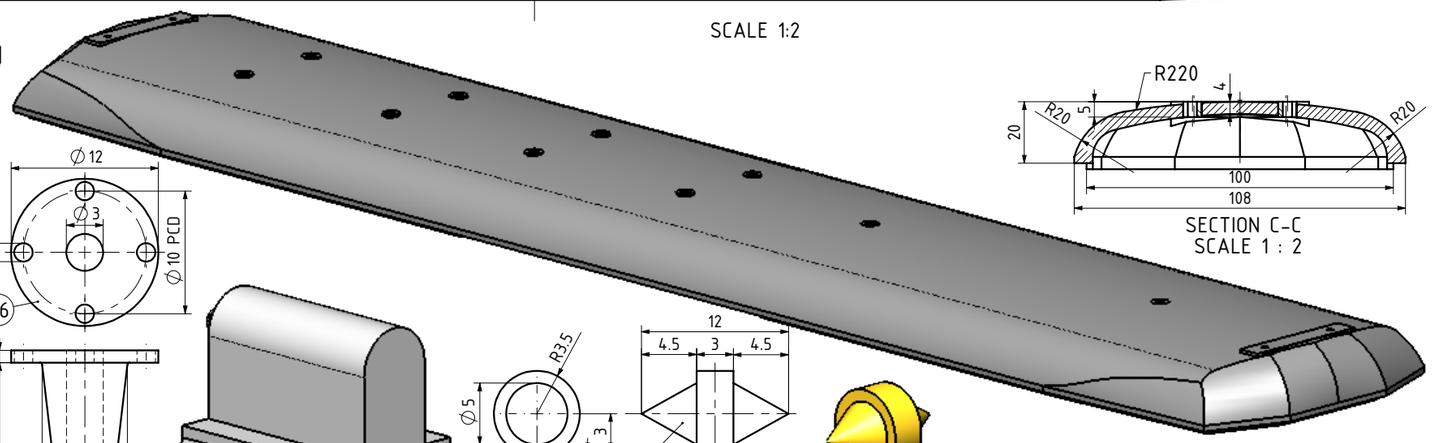

SECTION C-C
SCALE 1 : 2

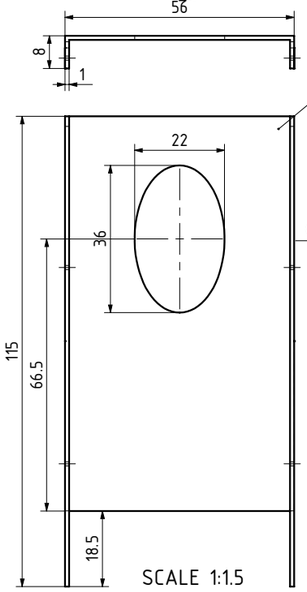

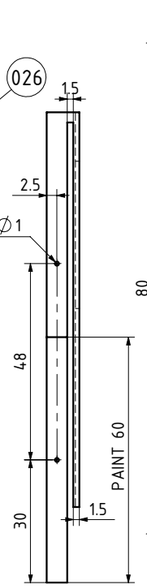

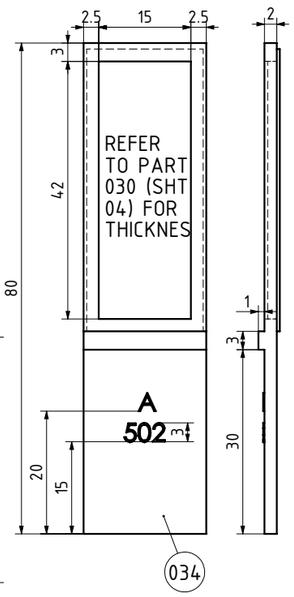

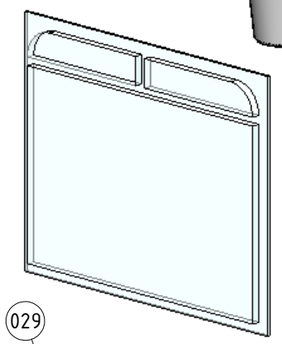

SCALE 2:1

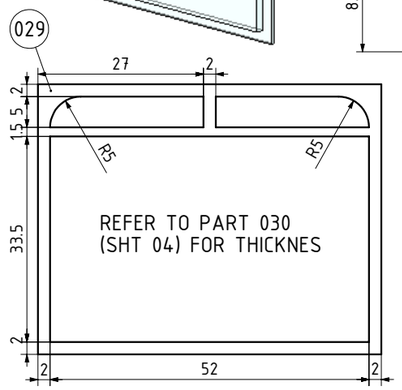

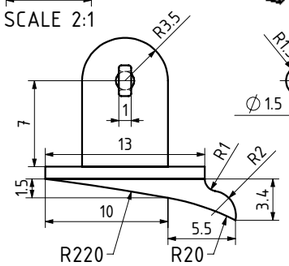

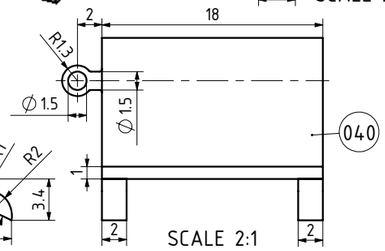

SCALE 2:1

SCALE 2:1



NOTES

MODEL SCALE 1 : 22.5 GAUGE 64mm	DRAWING CONTENTS
DWG SCALE 1:1 @ A3 OR AS SHOWN	MOTOR WAGON A502 PARTS & ASSEMBLIES
TITLE THE "BLAUWE TRAM" OF THE NZH MOTOR WAGON A502 AND WAGON B501	PROJECT No
	Copyright © J.A.M. DE WAAL PAPAKURA NZ

PROJECTION

JDW DRAUGHTING SERVICES
J.A.M. DE WAAL. 12 BRIGHTWELL STREET PAPAKURA 2110.
NEW ZEALAND. PHONE: 0064 09 2988815. MOB: 0211791000
E-MAIL: dewaal@xtra.co.nz.

DATE FEBRUARY 2012	A3	No:BTA502-B501
SHEET 05 OF 10		

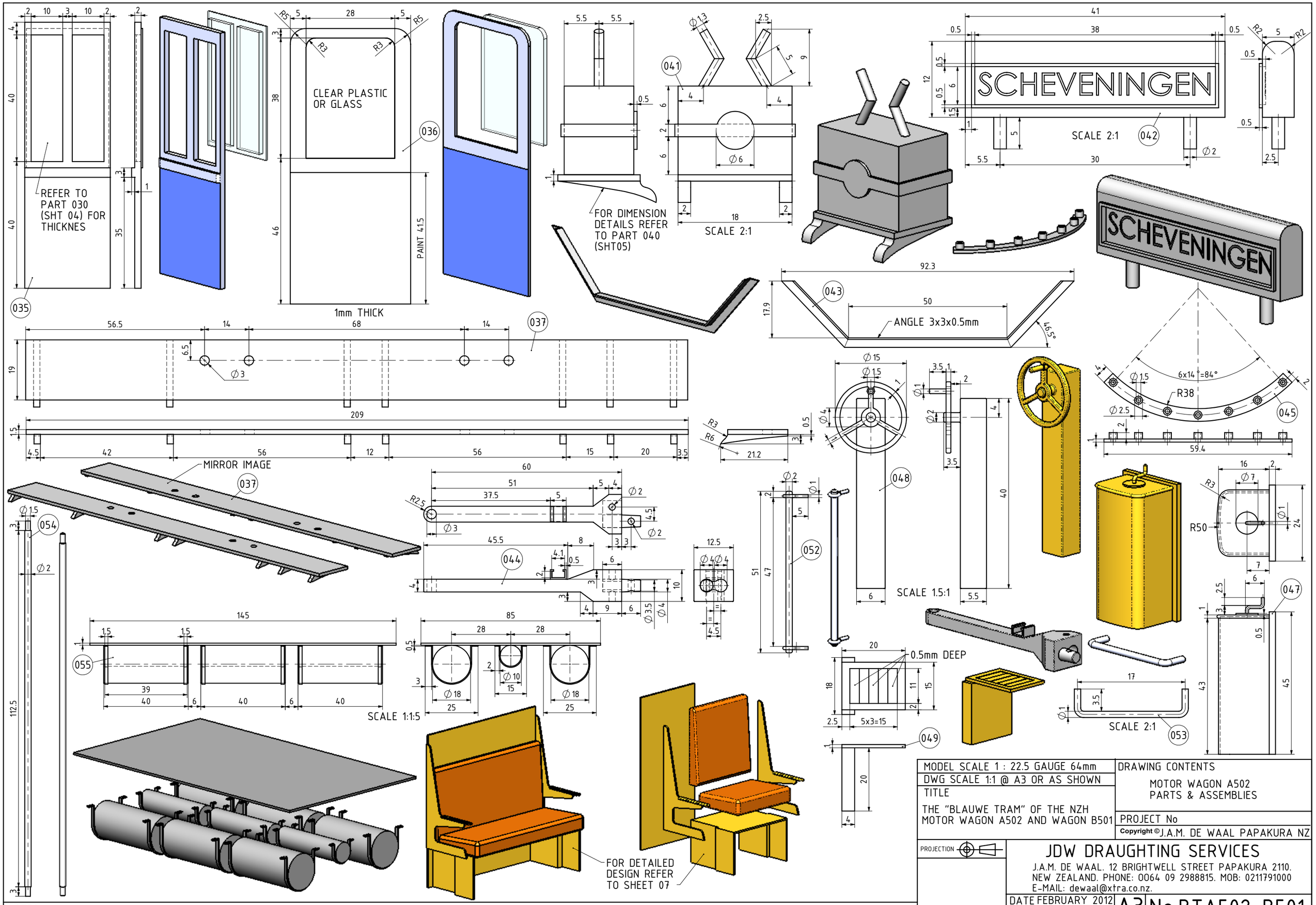

MODEL SCALE 1 : 22.5 GAUGE 64mm	DRAWING CONTENTS
DWG SCALE 1:1 @ A3 OR AS SHOWN	MOTOR WAGON A502 PARTS & ASSEMBLIES
TITLE	
THE "BLAUWE TRAM" OF THE NZH MOTOR WAGON A502 AND WAGON B501	PROJECT No
	Copyright © J.A.M. DE WAAL PAPAKURA NZ

PROJECTION

JDW DRAUGHTING SERVICES
J.A.M. DE WAAL. 12 BRIGHTWELL STREET PAPAKURA 2110.
NEW ZEALAND. PHONE: 0064 09 2988815. MOB: 0211791000
E-MAIL: dewaal@xtra.co.nz.

DATE FEBRUARY 2012 | A3 | No:BTA502-B501

SHEET 06 OF 10

NOTES

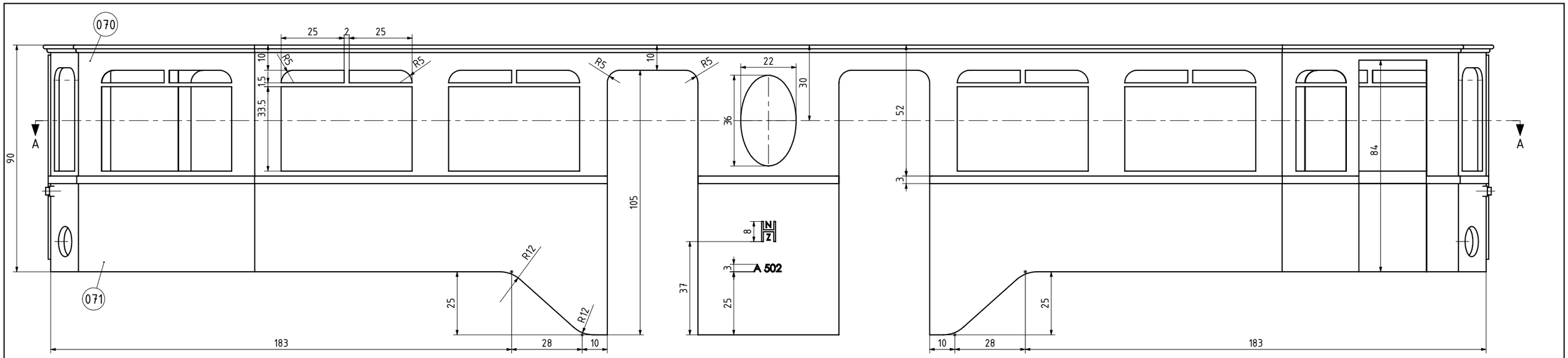

FOR ISOMETRIC VIEW REFER SHEET 08

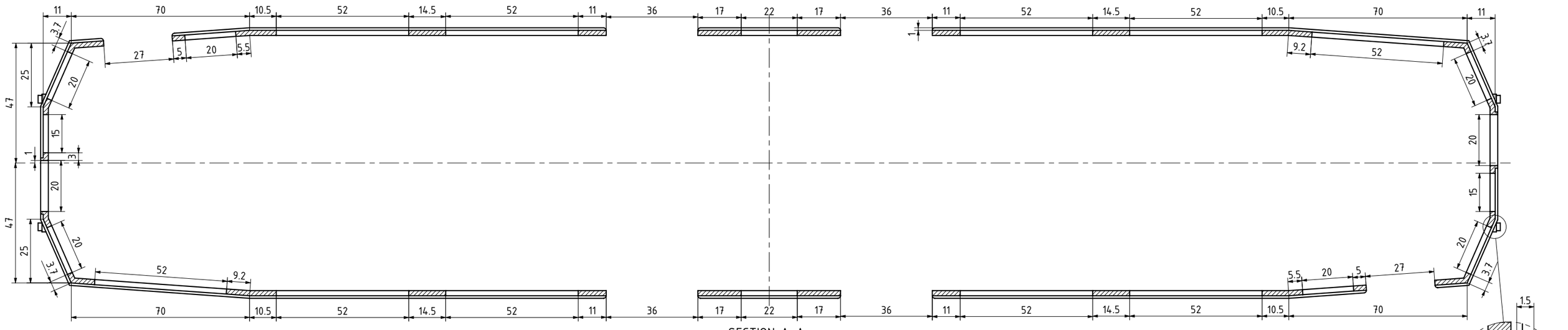

SECTION A-A
SCALE 1 : 1.5

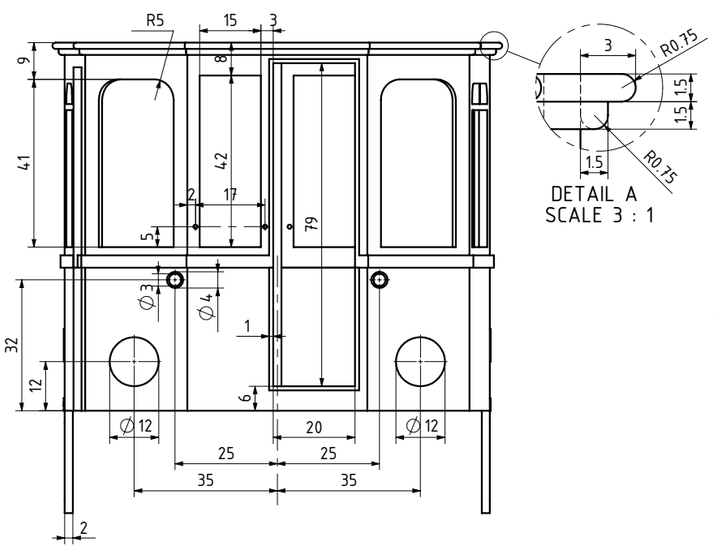

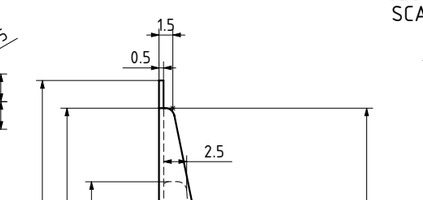

DETAIL A
SCALE 3 : 1

SCALE 1.5:1

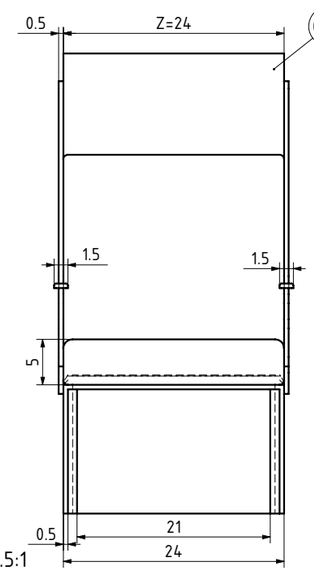

NOTE: FOR DOUBLE SEAT Z=48mm (PART 051)

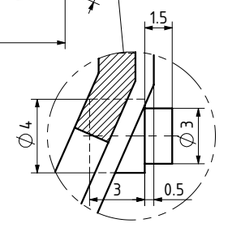

DETAIL B
SCALE 3 : 1

NOTES

MODEL SCALE 1 : 22.5 GAUGE 64mm	DRAWING CONTENTS
DWG SCALE 1:1 @ A3 OR AS SHOWN	MOTOR WAGON A502 PARTS & ASSEMBLIES
TITLE THE "BLAUWE TRAM" OF THE NZH MOTOR WAGON A502 AND WAGON B501	PROJECT No
	Copyright © J.A.M. DE WAAL PAPAKURA NZ

PROJECTION

JDW DRAUGHTING SERVICES
J.A.M. DE WAAL. 12 BRIGHTWELL STREET PAPAKURA 2110.
NEW ZEALAND. PHONE: 0064 09 2988815. MOB: 0211791000
E-MAIL: dewaal@xtra.co.nz.

DATE FEBRUARY 2012	A3	No:BTA502-B501
SHEET 07 OF 10		

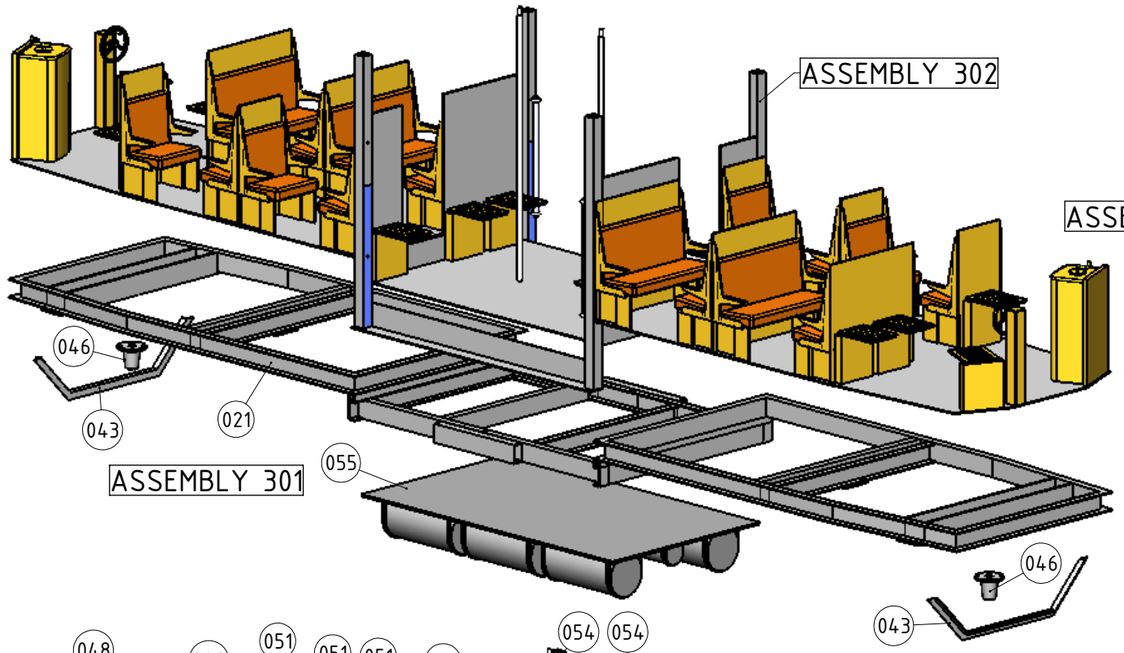

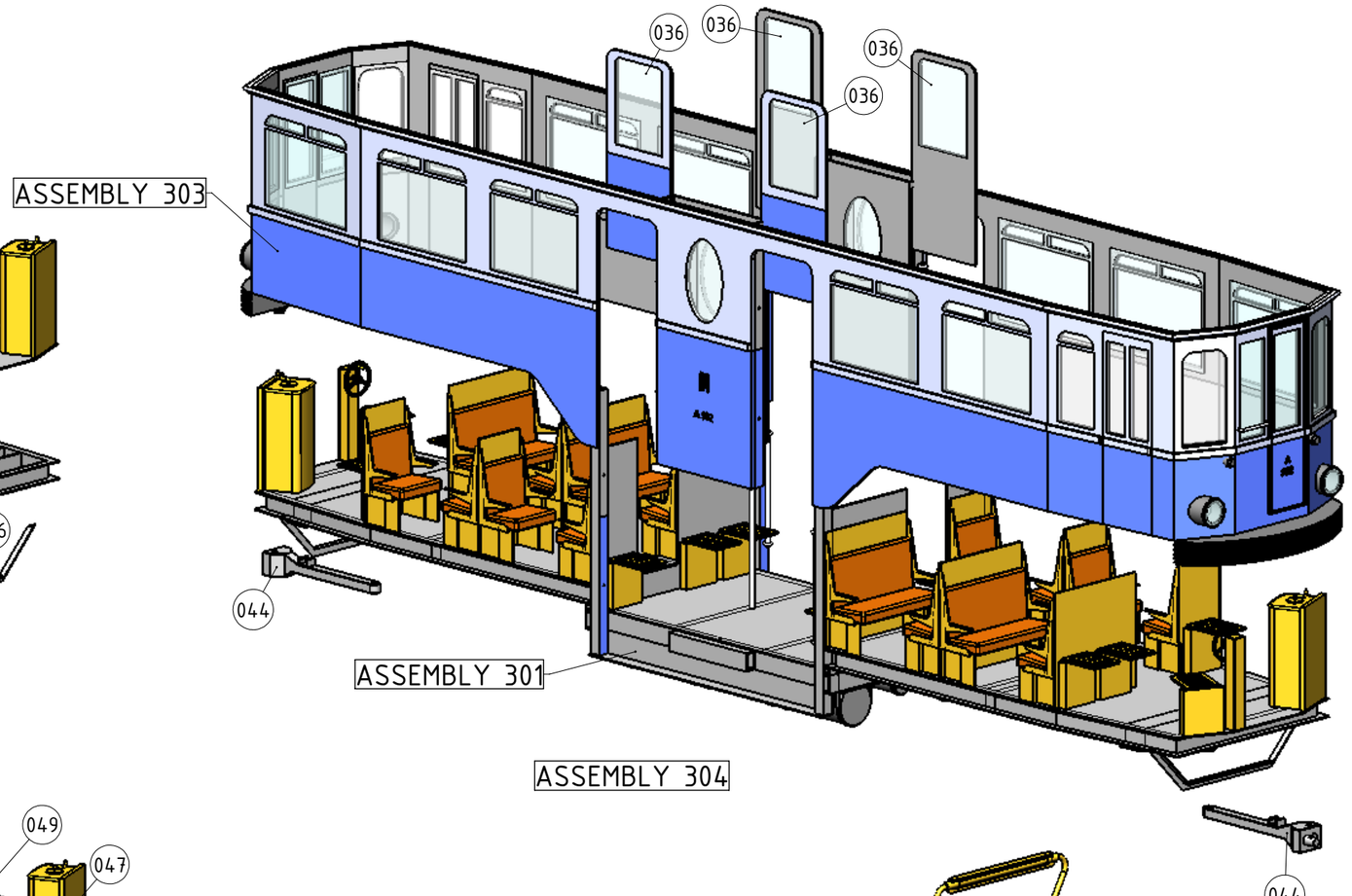

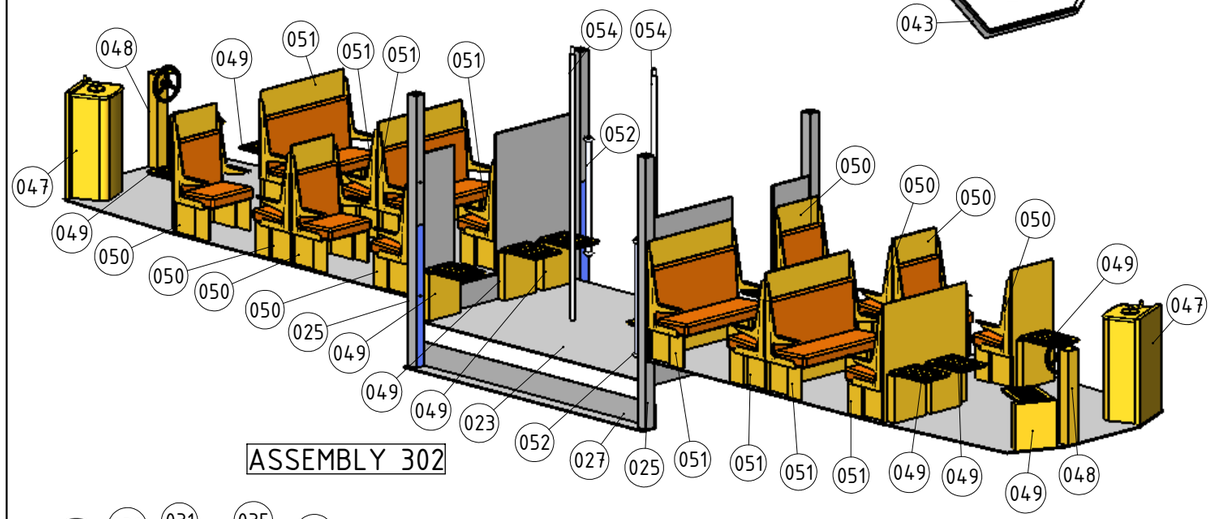

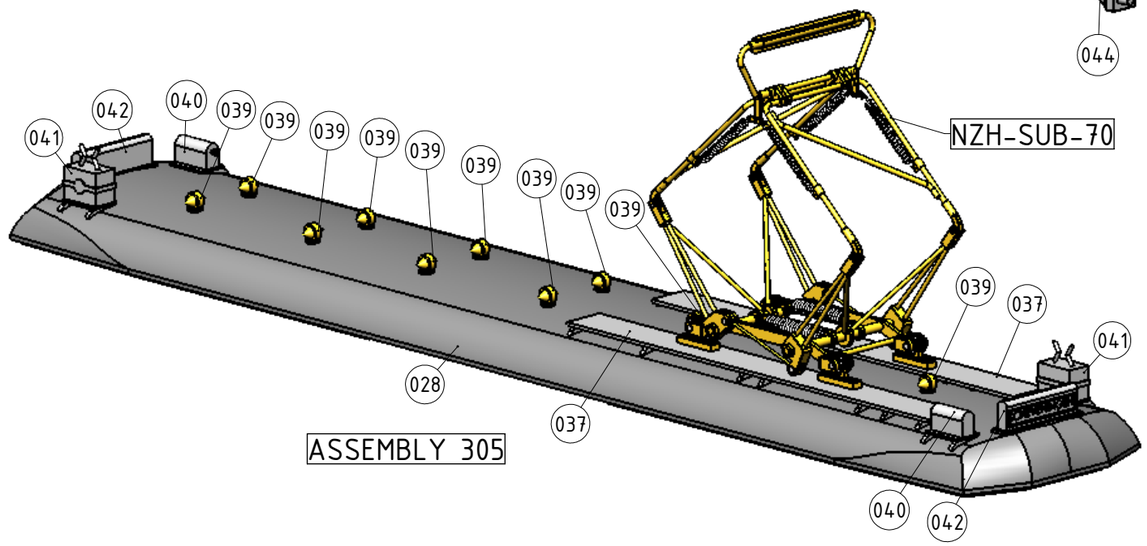

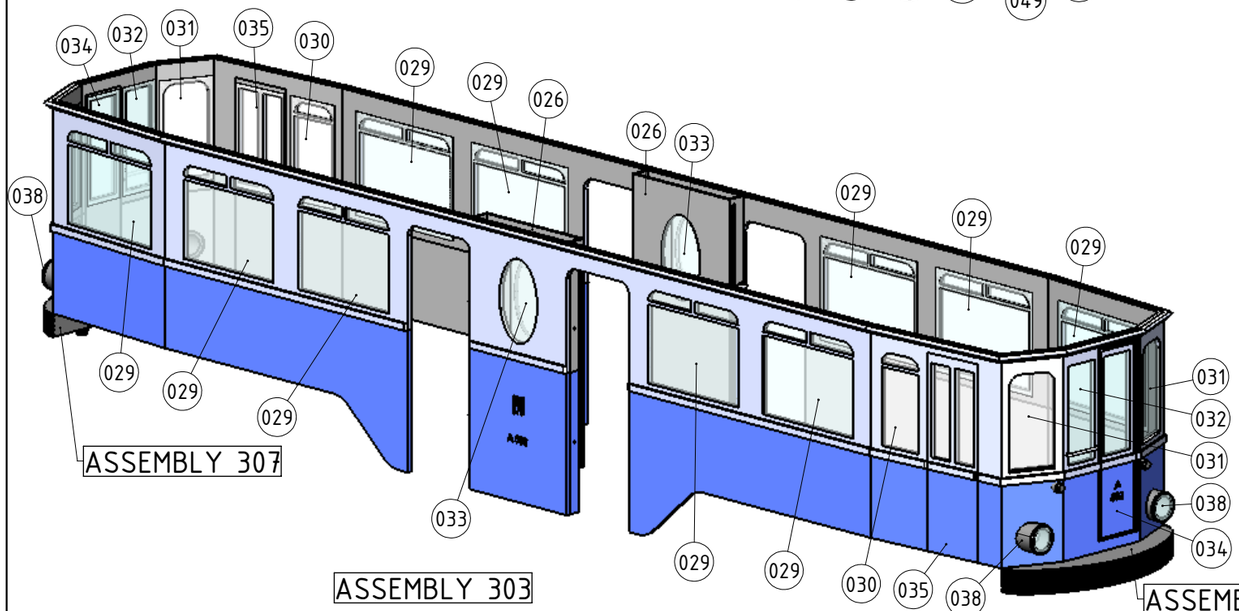

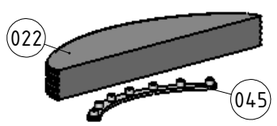

NOTES

MODEL SCALE 1 : 22.5 GAUGE 64mm	DRAWING CONTENTS
DWG SCALE 1:1 @ A3 OR AS SHOWN	MOTOR WAGON A502 PARTS & ASSEMBLIES
TITLE THE "BLAUWE TRAM" OF THE NZH MOTOR WAGON A502 AND WAGON B501	PROJECT No
	Copyright © J.A.M. DE WAAL PAPAKURA NZ

PROJECTION

JDW DRAUGHTING SERVICES
J.A.M. DE WAAL. 12 BRIGHTWELL STREET PAPAKURA 2110.
NEW ZEALAND. PHONE: 0064 09 2988815. MOB: 0211791000
E-MAIL: dewaal@xtra.co.nz.

DATE FEBRUARY 2012	A3	No:BTA502-B501
SHEET 08 OF 10		

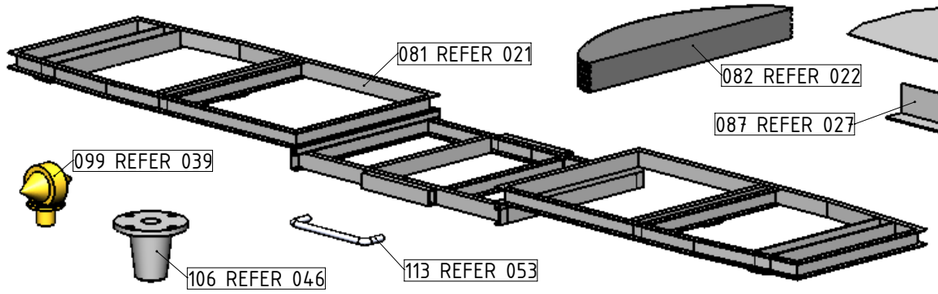

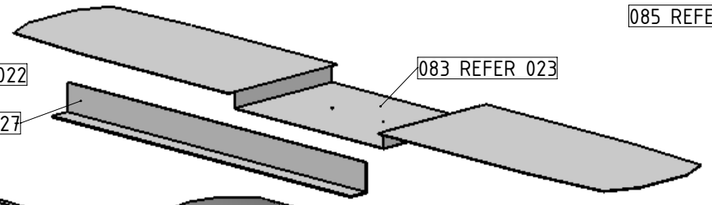

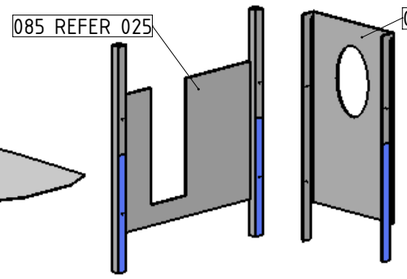

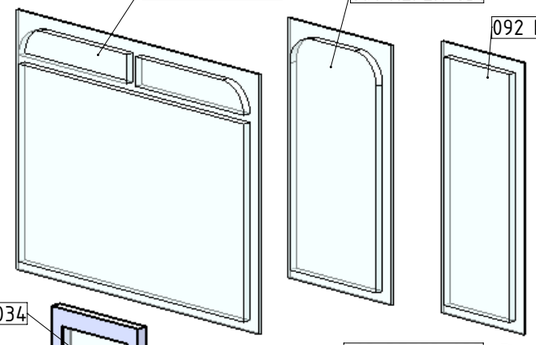

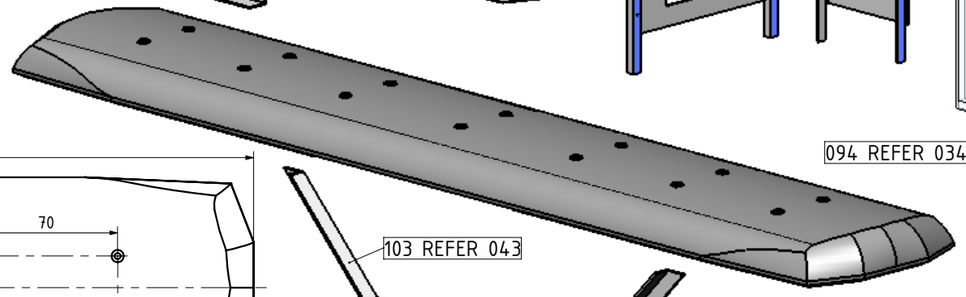

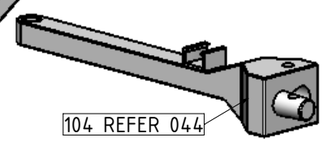

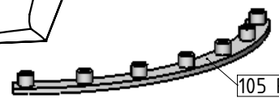

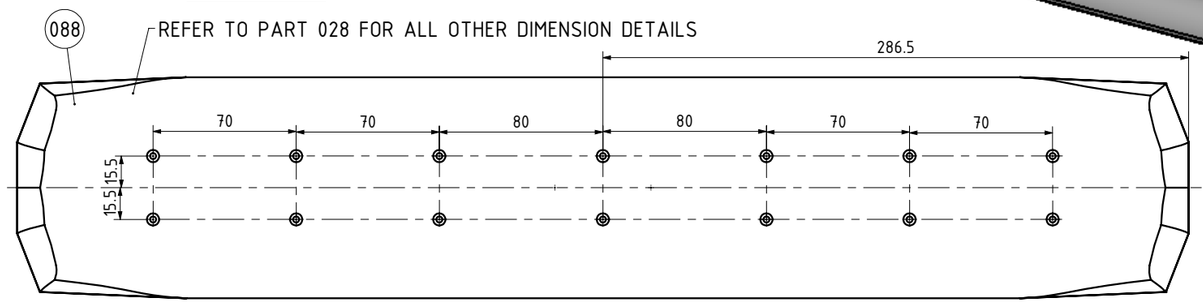

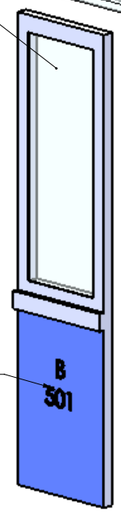

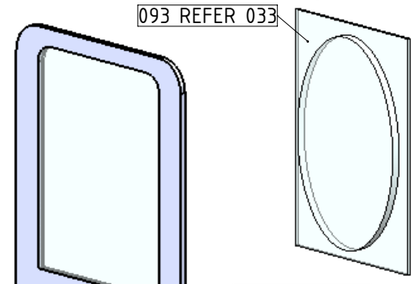

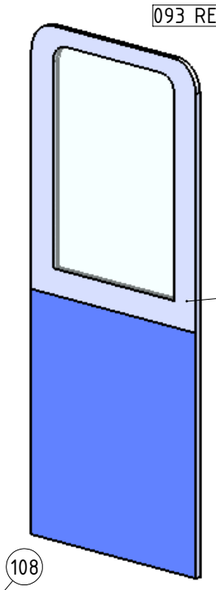

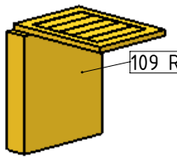

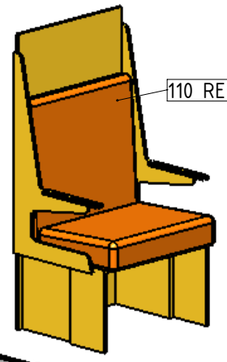

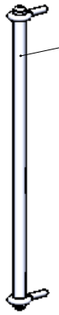

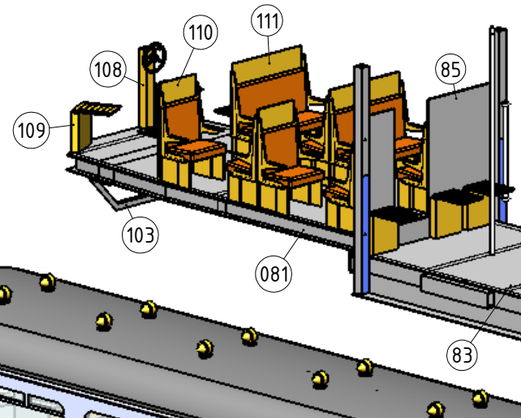

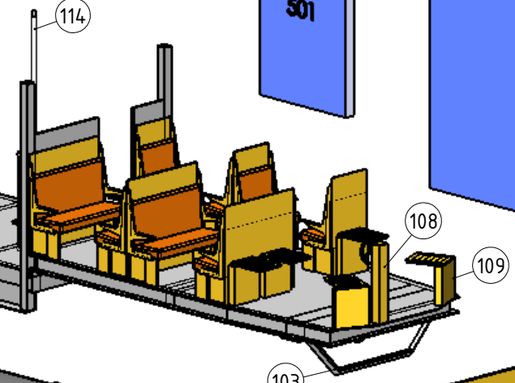

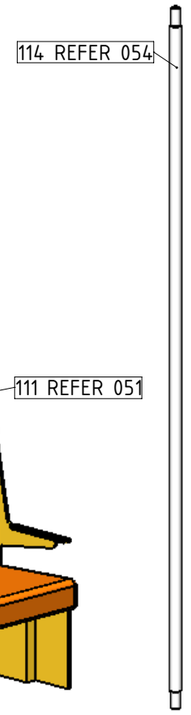

SIDE SMALL WINDOOW
AND SIDE EM-EXIT DOOR
REMOVED AND REPLACED
WITH LARGE SIDE WINDOW

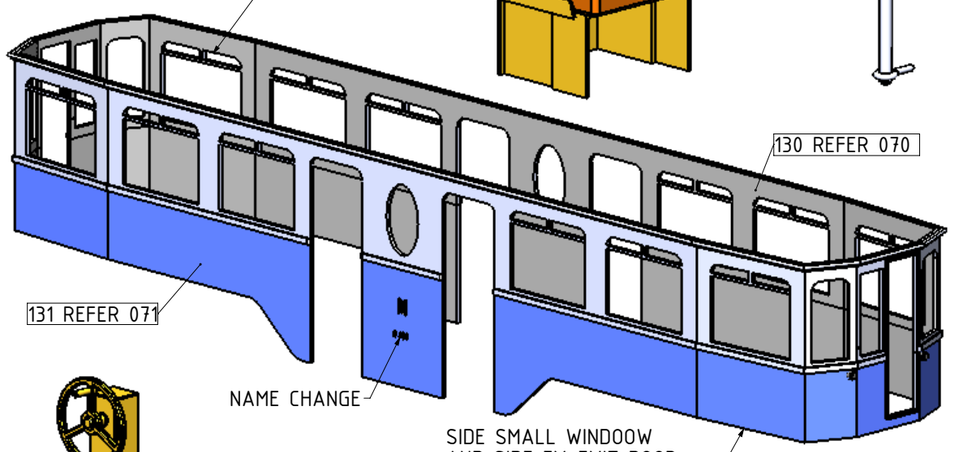

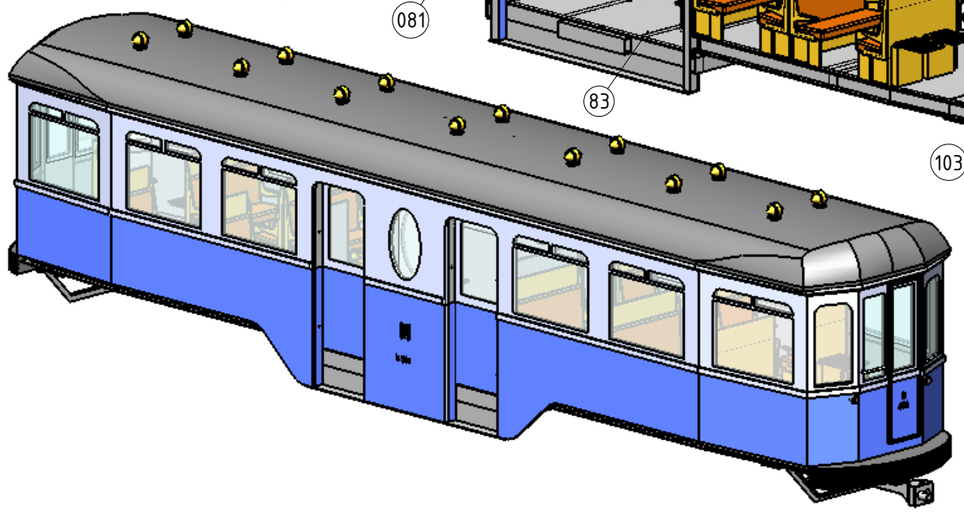

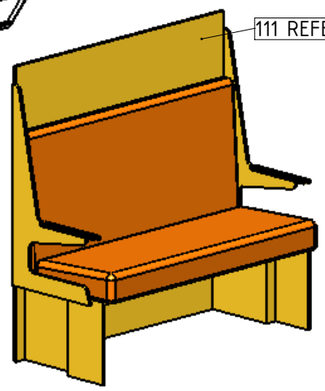

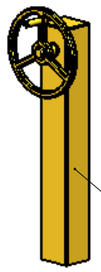

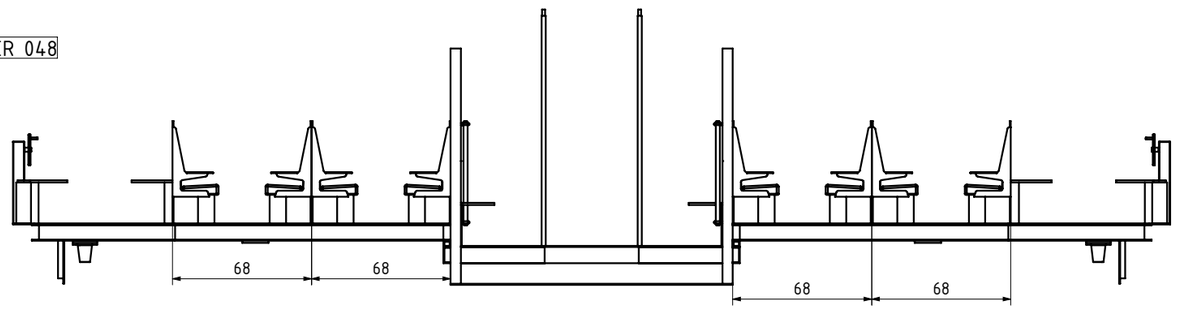

NOTES

MODEL SCALE 1 : 22.5 GAUGE 64mm	DRAWING CONTENTS
DWG SCALE 1:1 @ A3 OR AS SHOWN	WAGON B501 PARTS &ASSEMBLIES
TITLE THE "BLAUWE TRAM" OF THE NZH MOTOR WAGON A502 AND WAGON B501	PROJECT No
	Copyright ©J.A.M. DE WAAL PAPAKURA NZ

PROJECTION

JDW DRAUGHTING SERVICES
J.A.M. DE WAAL. 12 BRIGHTWELL STREET PAPAKURA 2110.
NEW ZEALAND. PHONE: 0064 09 2988815. MOB: 0211791000
E-MAIL: dewaal@xtra.co.nz.

DATE FEBRUARY 2012	A3	No:BTA502-B501
SHEET 09 OF 10		

02

SCALE 2:1

03

04

05

06

07

08

SCALE 2:1

09

SCALE 2:1

10

11

12

13

14

15

16

SCALE 2:1

17

18A

SCALE 1.5:1

18B

19A

19B

20

SCALE 2:1

22

2mm THICK
SCALE 2:1

23

SCALE 2:1

24

SCALE 1.5:1

25

26

1mm THICK
SCALE 2:1

27

28

SCALE 2:1

29

31A

20 COILS

31B

MIRROR

32A

33

SCALE 1.5:1

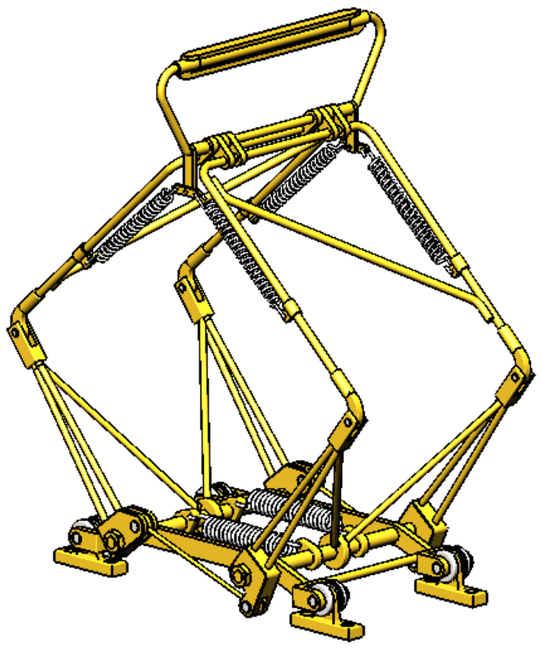

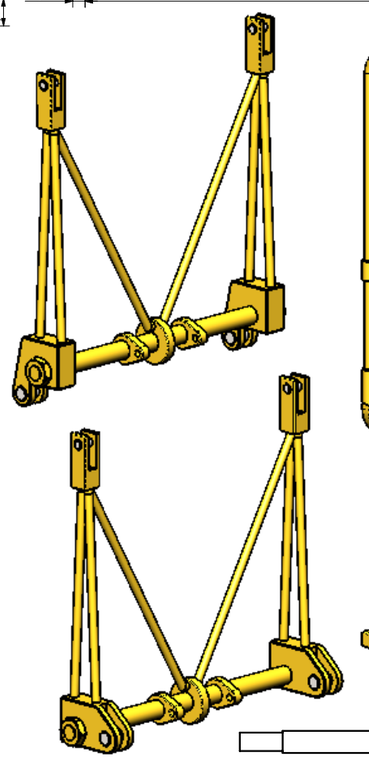

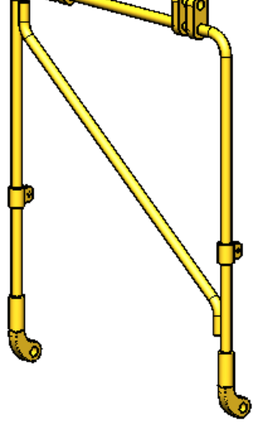

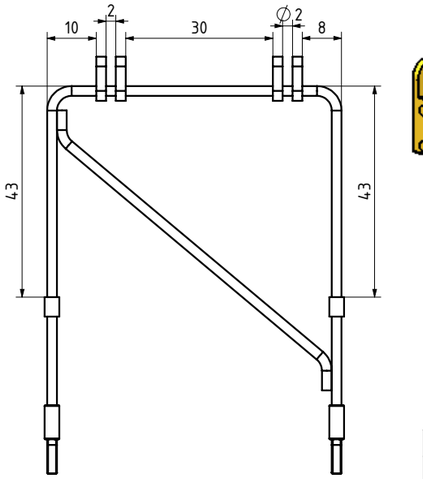

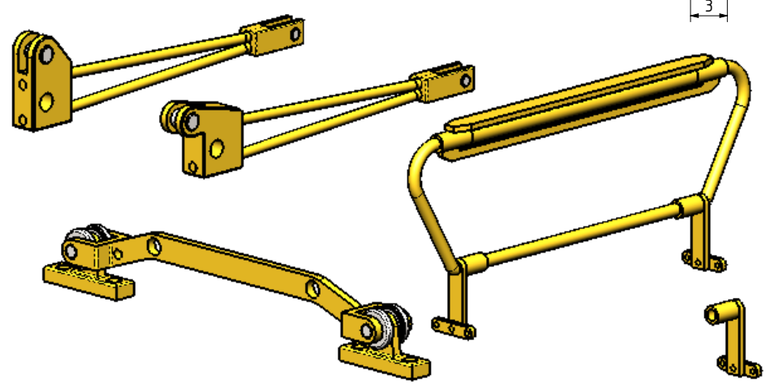

MODEL SCALE 1 : 22.5 GAUGE 64mm	DRAWING CONTENTS
DWG SCALE 1:1 @ A3 OR AS SHOWN	PANTOGRAPH PARTS & ASSEMBLIES
TITLE THE "BLAUWE TRAM" OF THE NZH MOTOR WAGON A502 AND WAGON B501	PROJECT No
	Copyright © J.A.M. DE WAAL PAPAKURA NZ

PROJECTION

JDW DRAUGHTING SERVICES
J.A.M. DE WAAL. 12 BRIGHTWELL STREET PAPAKURA 2110.
NEW ZEALAND. PHONE: 0064 09 2988815. MOB: 0211791000
E-MAIL: dewaal@xtra.co.nz.

DATE FEBRUARY 2012
SHEET 10 OF 10

A3 No:BTA502-B501

NOTES