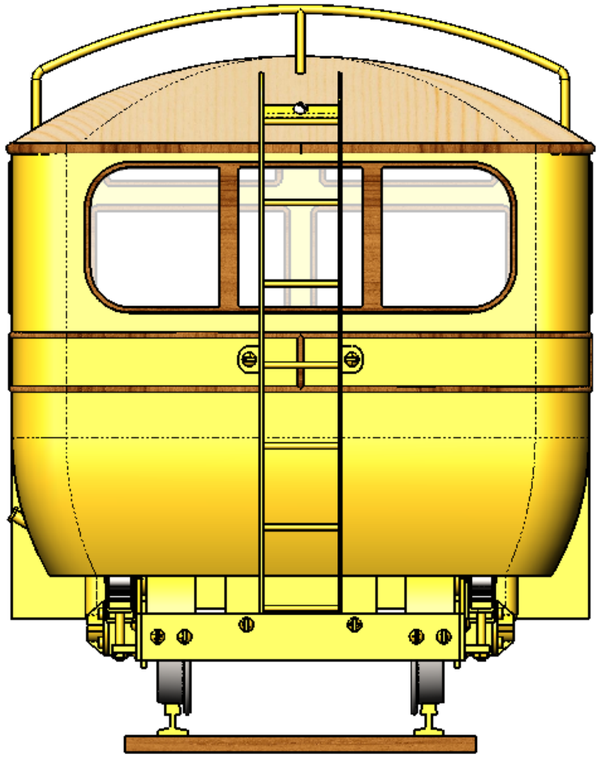

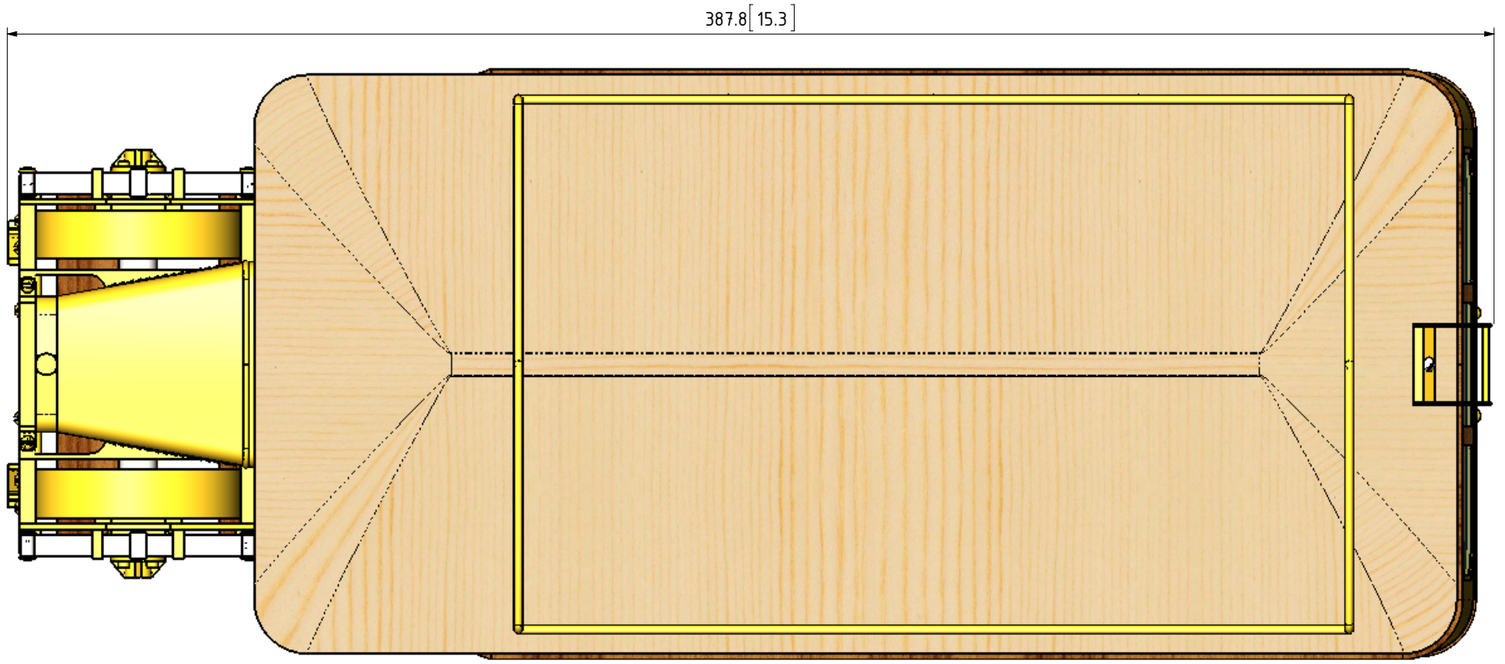

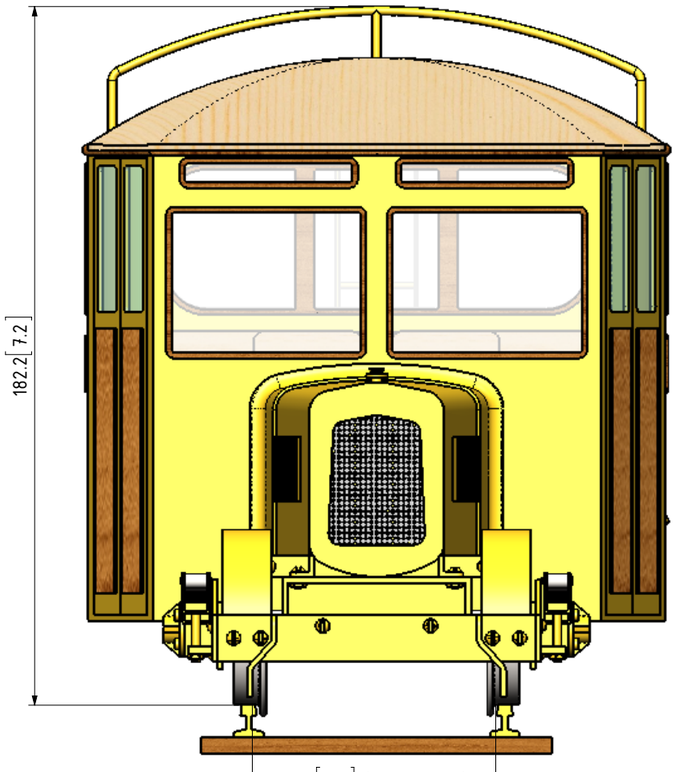

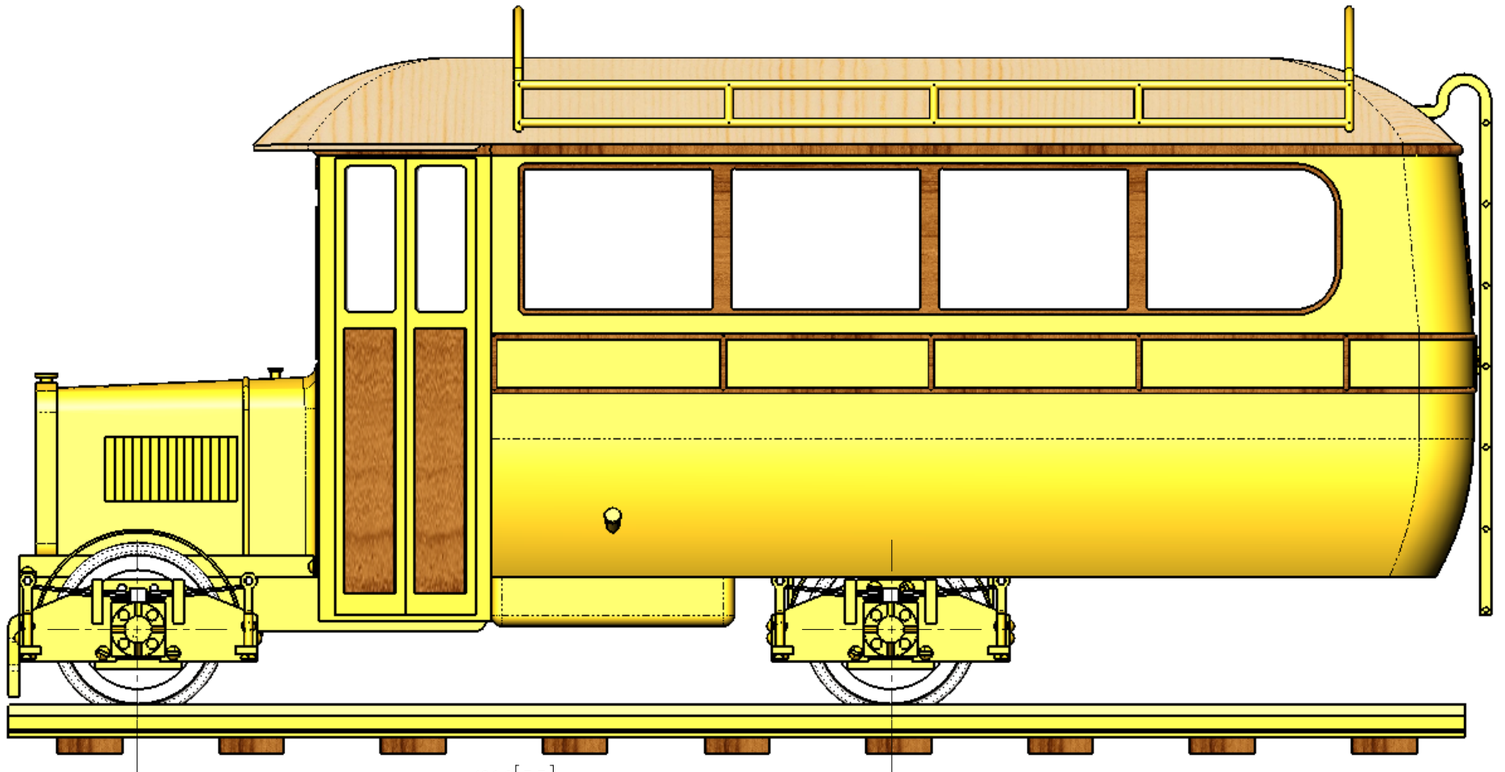

NOTES:

TITLE

IRISH RAILCAR No4 (1928) OF THE COUNTY DONEGAL RAILWAYS JOINT COMMITTEE

DRAWING CONTENTS

GENERAL ARRANGEMENT

PROJECT No

JDW DRAUGHTING SERVICES

J.A.M. DE WAAL. 12 BRIGHTWELL STREET PAPAKURA 2110. NEW ZEALAND. PHONE: 0064 09 2988815. MOB: 0211791000
E-MAIL: dewaal@xtra.co.nz.

PROJECTION

DATE FEBRUARY 2014

SHEET:01 OF 05

MODEL SCALE: 1:14.4 TRACK 63.5mm

DWG SCALE: 1:1 @A3 OR AS SHOWN

Copyright © J.A.M. DE WAAL PAPAKURA NZ

A3 No: CDRJC-4-64-01

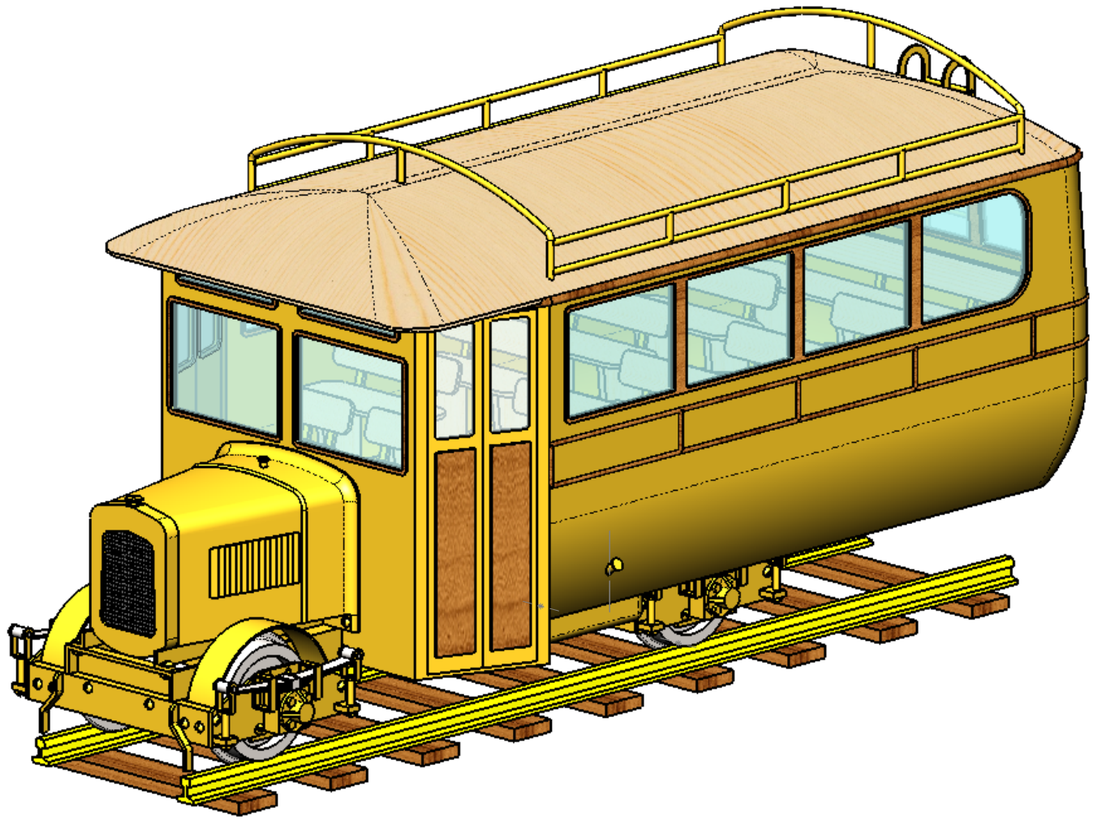

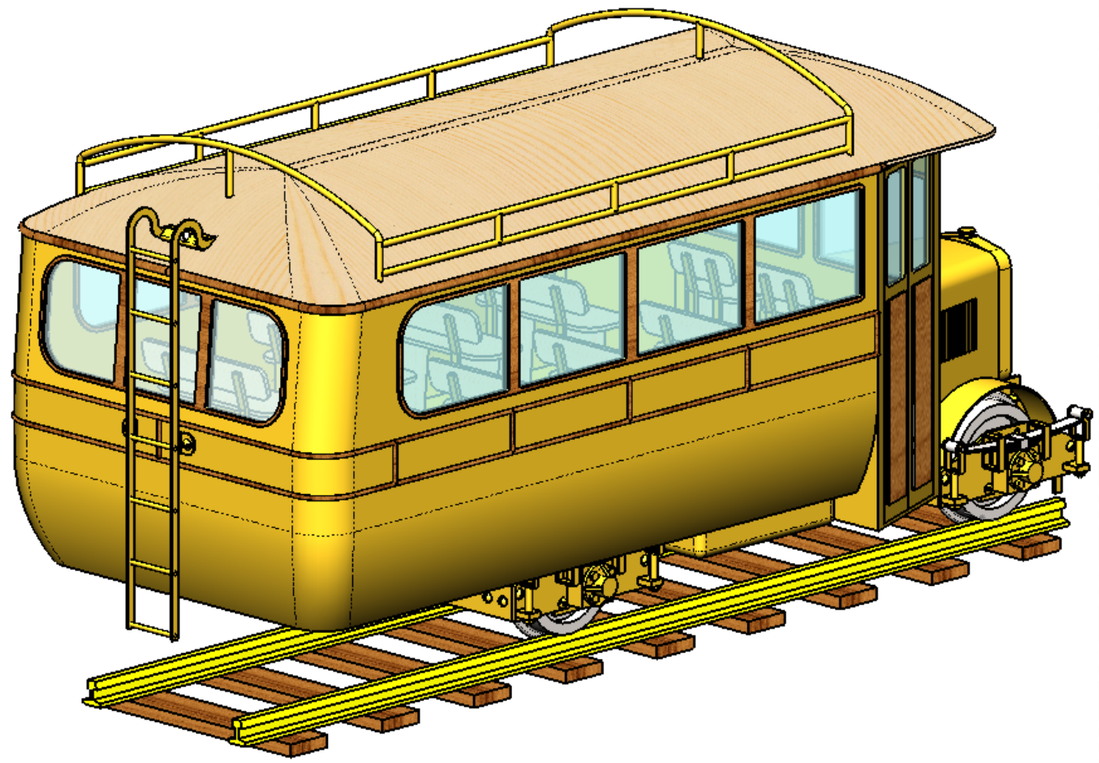

QTY.	PART NUMBER
4	DRJC-64-01-BOGIE WHEEL
2	DRJC-64-02-BOGIE WHEEL AXLE
4	DRJC-64-03-BOGIE SIDE FRAME
4	DRJC-64-04-BOGIE FRONT-REAR FRAME
4	DRJC-64-05-BOGIE AXLE BLOCK
4	DRJC-64-06-BOGIE LEAF SPRING
8	DRJC-64-07-BOGIE LEAF SPRING BRACKET
4	DRJC-64-09-BOGIE AXLE BLOCK RETAINER
4	DRJC-64-10-BOGIE SPLASH GAURD
1	DRJC-64-11-BOGIE R-H SCOOP
1	DRJC-64-12-BOGIE L-H SCOOP
1	DRJC-64-13-ROOF
1	DRJC-64-14-ROOF RACK
1	DRJC-64-15-REAR LADDER
1	DRJC-64-16-BOGIE REAR MOUNTING PLATE
1	DRJC-64-19-FLOOR
1	DRJC-64-20-BOGIE FRONT MOUNTING PLATE
1	DRJC-64-22-MOTOR BONNET
4	DRJC-64-23-SIDE DOORS
1	DRJC-64-24-ENGINE BODY
1	DRJC-64-25-MOTOR RADIATOR
1	DRJC-64-25B-MOTOR RADIATOR
2	DRJC-64-26-DRIVER SEAT
8	DRJC-64-27-PASSENGERS SEAT
1	DRJC-64-28-PASSENGERS REAR SEAT
1	DRJC-64-29-PETROL TANK
1	DRJC-64-30-BODY TRIM
4	DRJC-64-41-WINDOW TRIMMING TYPE-A
4	DRJC-64-42-WINDOW TRIMMING TYPE-B
4	DRJC-64-43-WINDOW TRIMMING TYPE-C
2	DRJC-64-44-WINDOW TRIMMING TYPE-D
52	DRJC-64-M2 NUT
28	DRJC-64-M2x4.5 R-HEAD SCREW
24	DRJC-64-M2x7 R-HEAD SCREW
4	DRJC-64-M4 NUT
4	DRJC-64-M4x7 R-HEAD SCREW
1	DRJC-64-RAIL TRACK 64mm (2.5in)
1	DRJC-64-WOOD SCREW

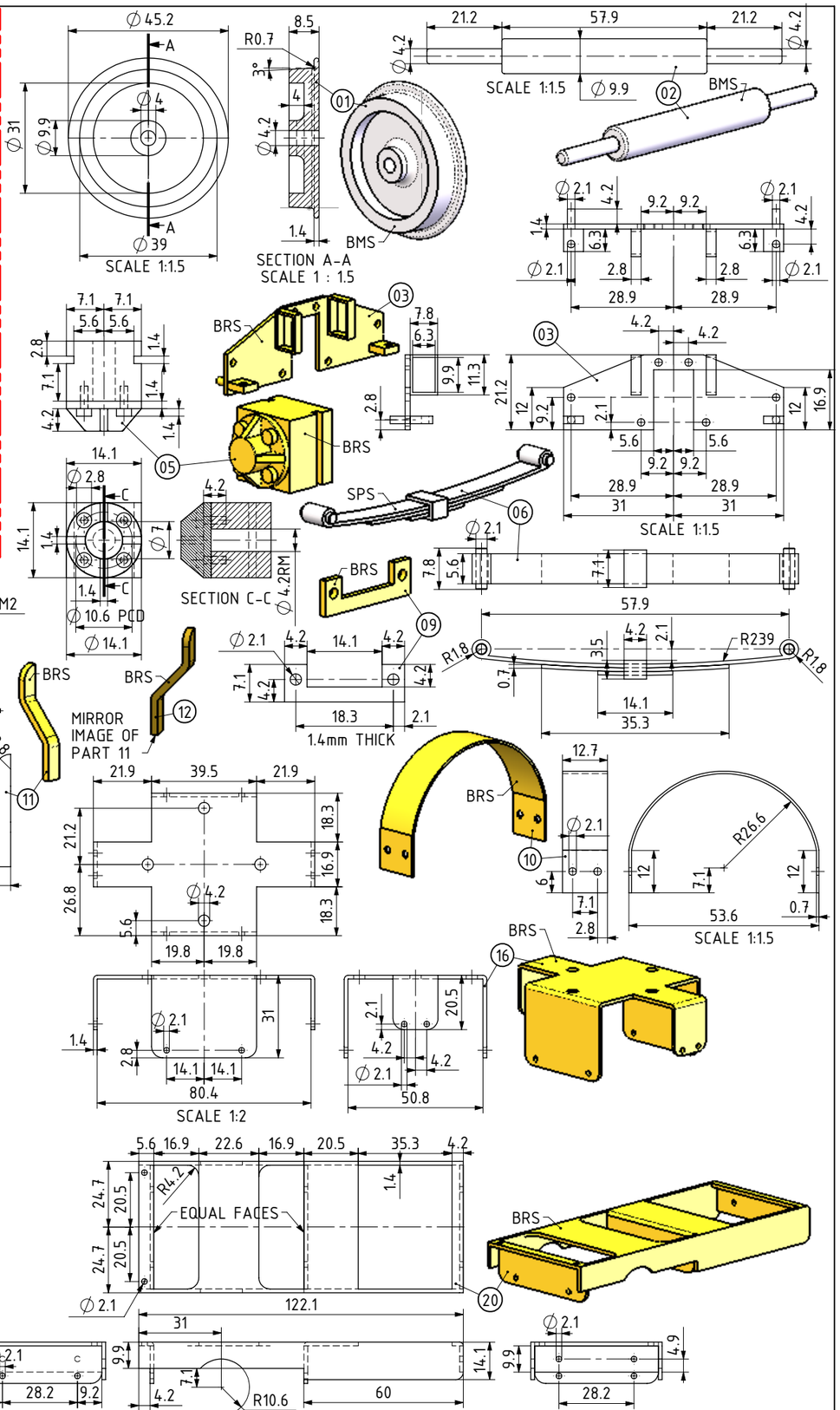

NOTES:

TITLE IRISH RAILCAR No4 (1928) OF THE COUNTY DONEGAL RAILWAYS JOINT COMMITTEE	DRAWING CONTENTS ISOMETRIC VIEW, B.O.M, PARTS AND ASSEMBLIES	PROJECT No JDW DRAUGHTING SERVICES J.A.M. DE WAAL. 12 BRIGHTWELL STREET PAPAKURA 2110 NEW ZEALAND. PHONE: 0064 09 2988815. MOB: 0211791000 E-MAIL: dewaal@xtra.co.nz.	PROJECTION DATE FEBRUARY 2014 SHEET:02 OF 05
			MODEL SCALE: 1:14.4 TRACK 63.5mm DWG SCALE: 1:1 @A3 OR AS SHOWN Copyright © J.A.M. DE WAAL PAPAKURA NZ A3 No: CDRJC-4-64-02

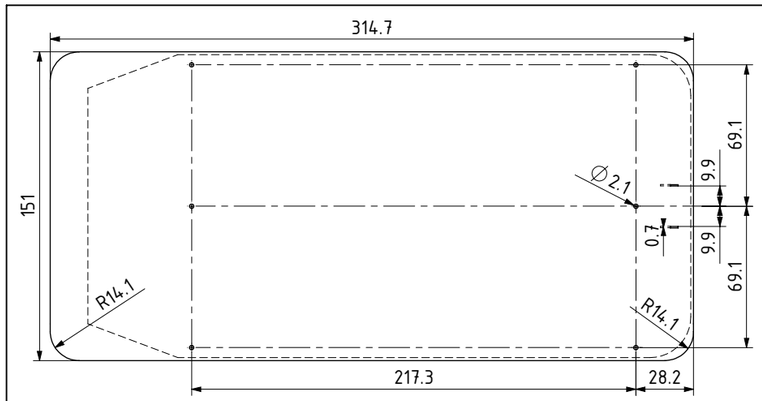

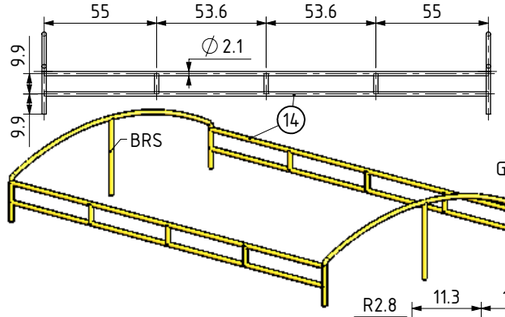

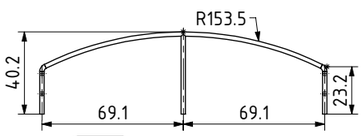

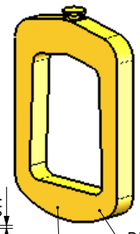

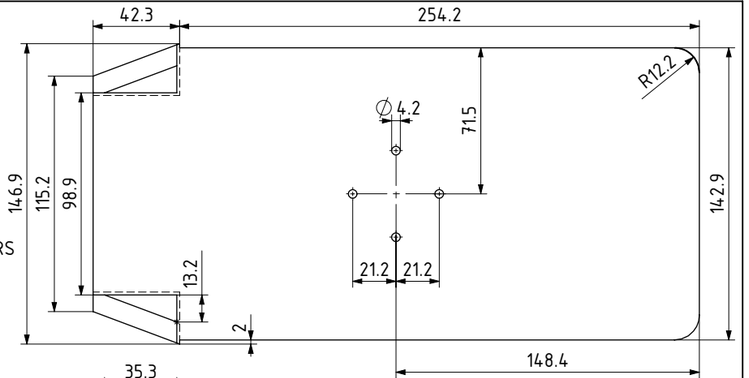

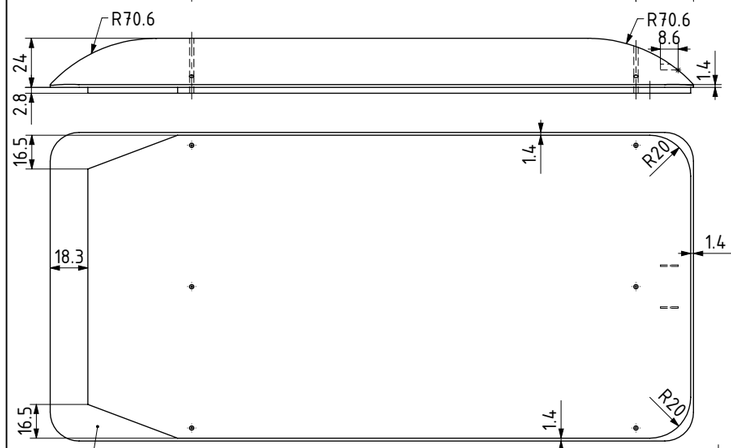

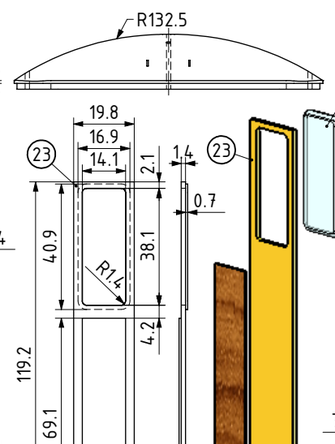

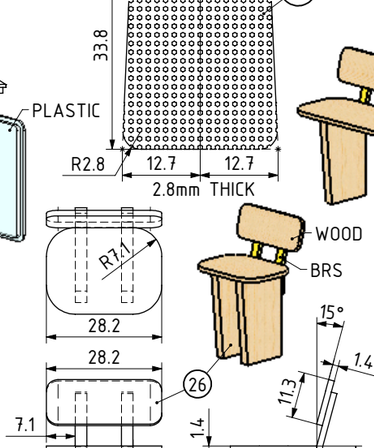

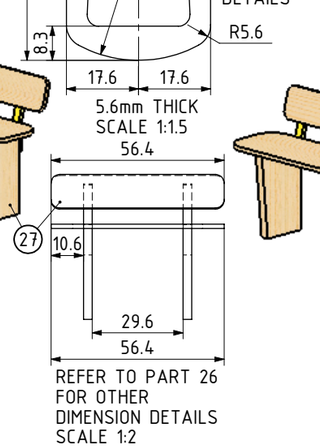

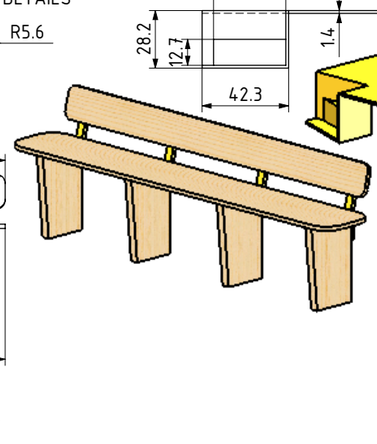

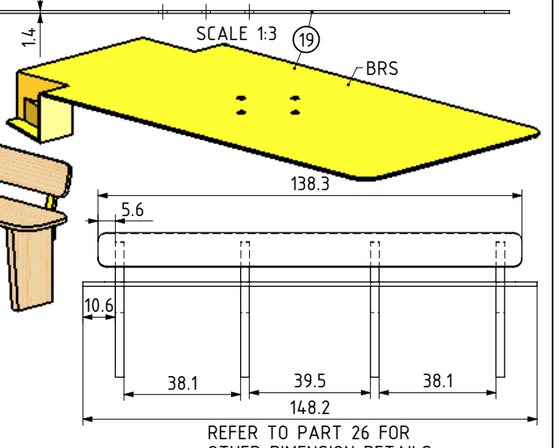

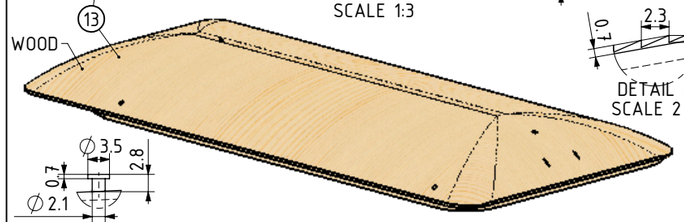

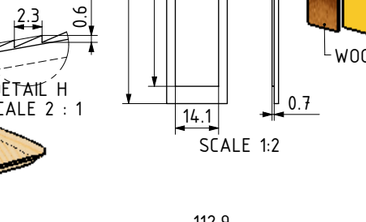

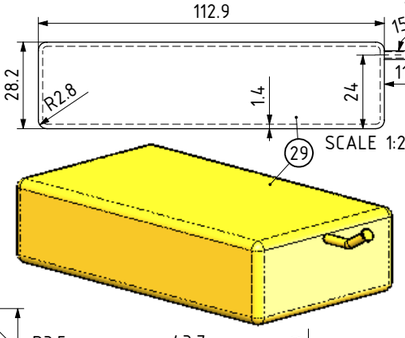

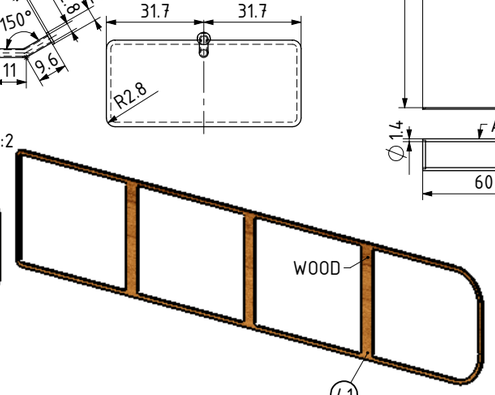

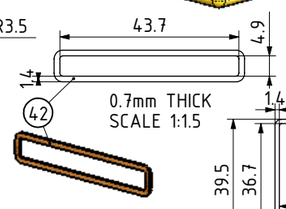

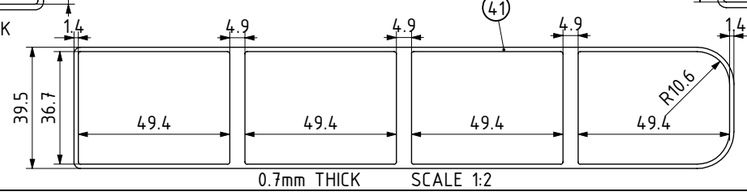

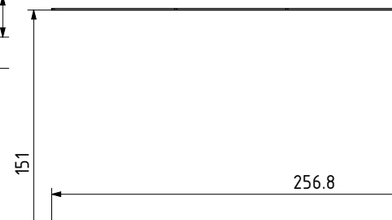

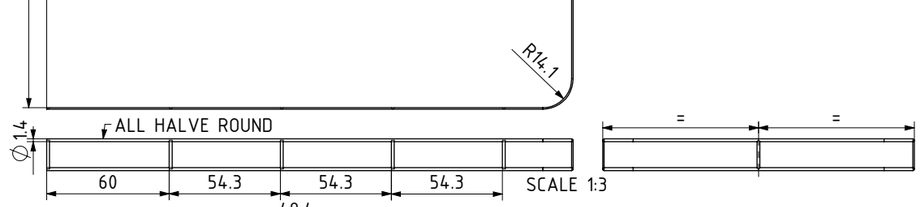

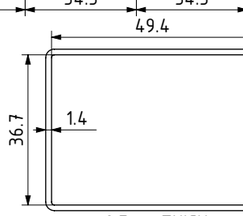

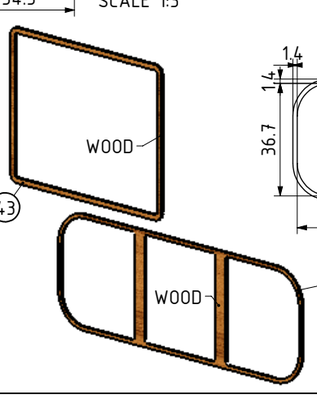

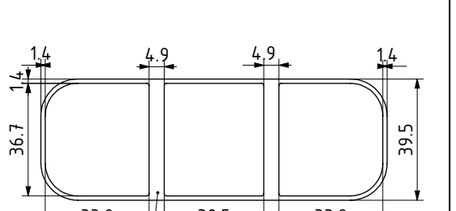

NOTES:

TITLE

IRISH RAILCAR No4 (1928) OF THE COUNTY DONEGAL RAILWAYS JOINT COMMITTEE

DRAWING CONTENTS

PARTS AND ASSEMBLIES

PROJECT No

JDW DRAUGHTING SERVICES

J.A.M. DE WAAL. 12 BRIGHTWELL STREET PAPAKURA 2110. NEW ZEALAND. PHONE: 0064 09 2988815. MOB: 0211791000 E-MAIL: dewaal@xtra.co.nz.

PROJECTION

DATE FEBRUARY 2014

SHEET:03 OF 05

MODEL SCALE: 1:14.4 TRACK 63.5mm

DWG SCALE: 1:1 @A3 OR AS SHOWN

Copyright © J.A.M. DE WAAL PAPAKURA NZ

A3 No: CDRJC-4-64-03

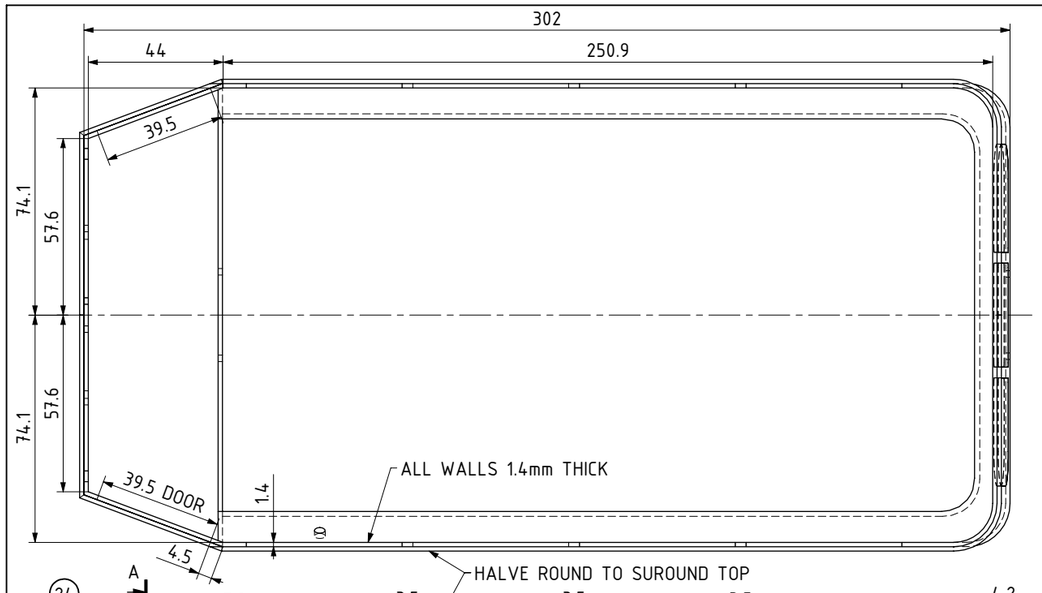

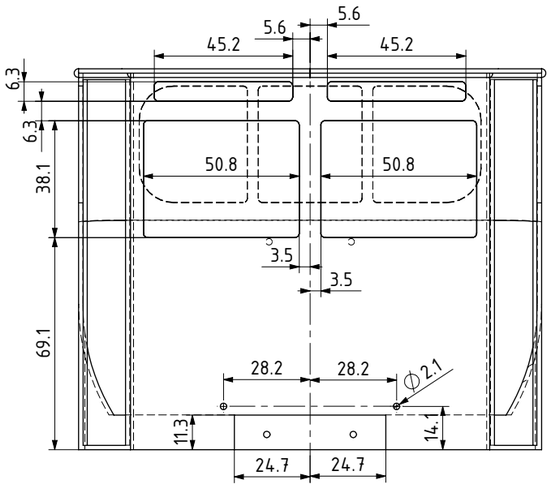

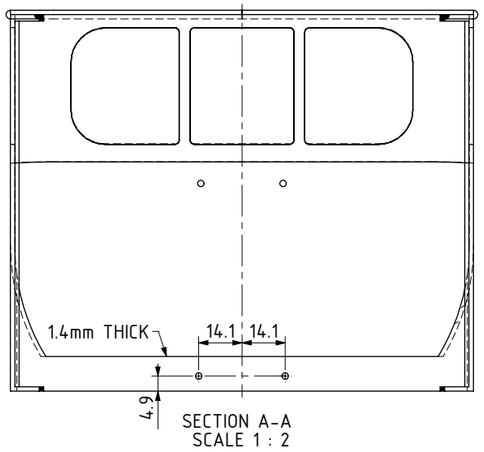

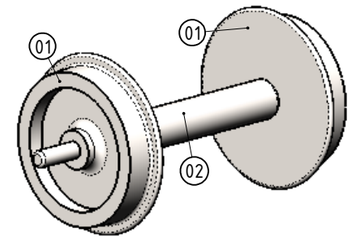

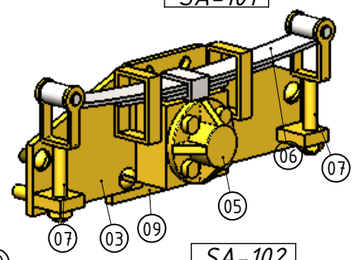

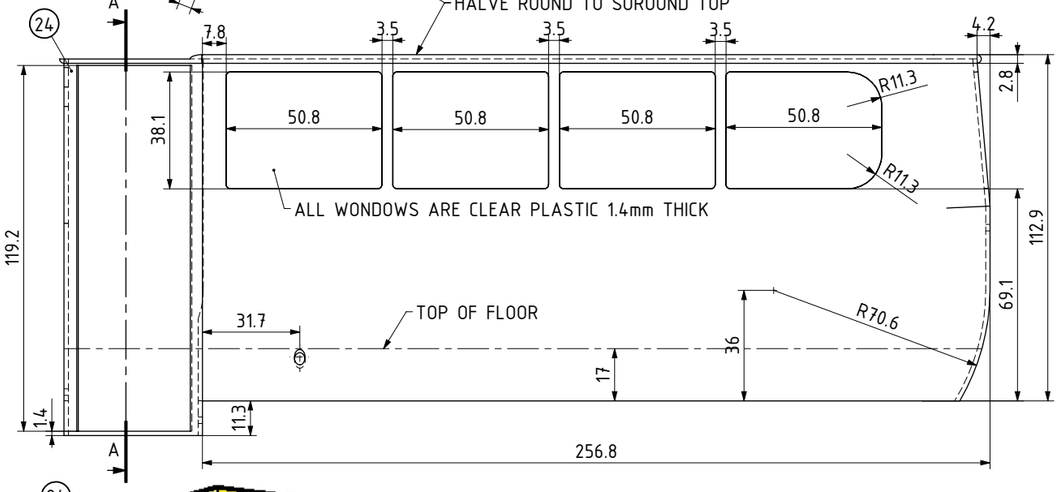

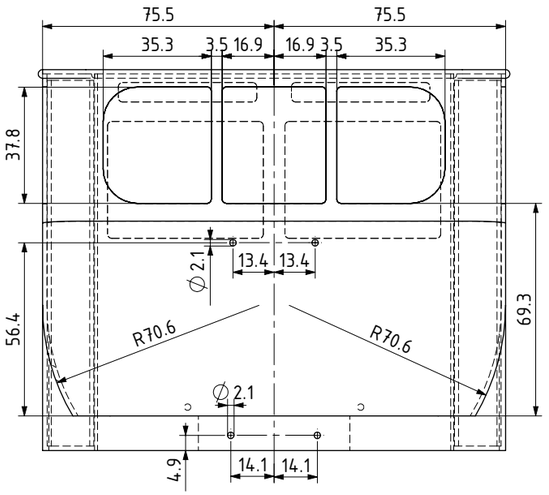

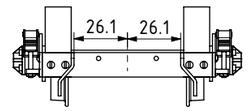

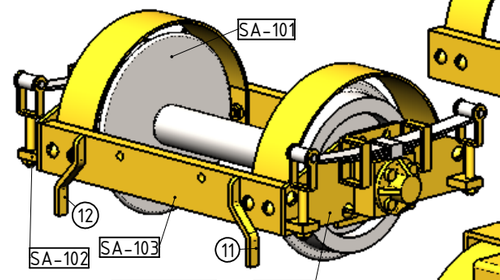

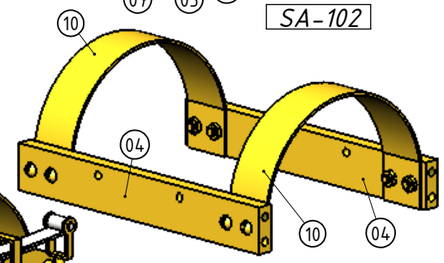

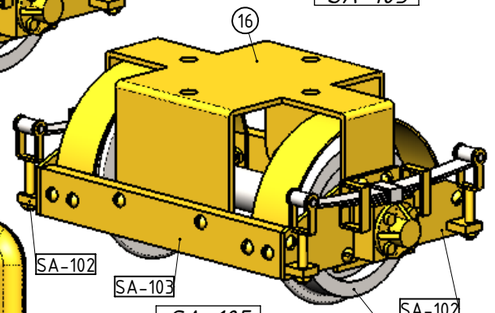

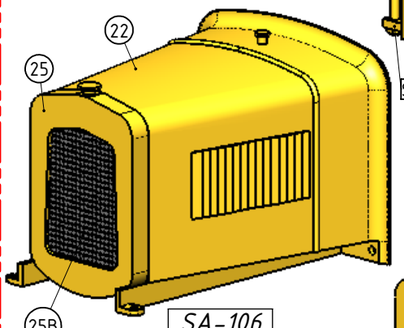

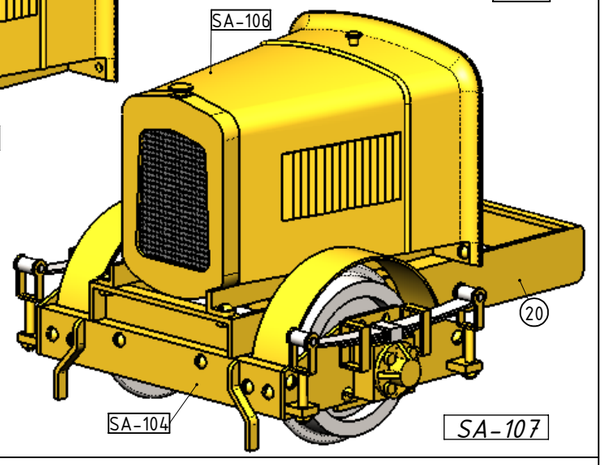

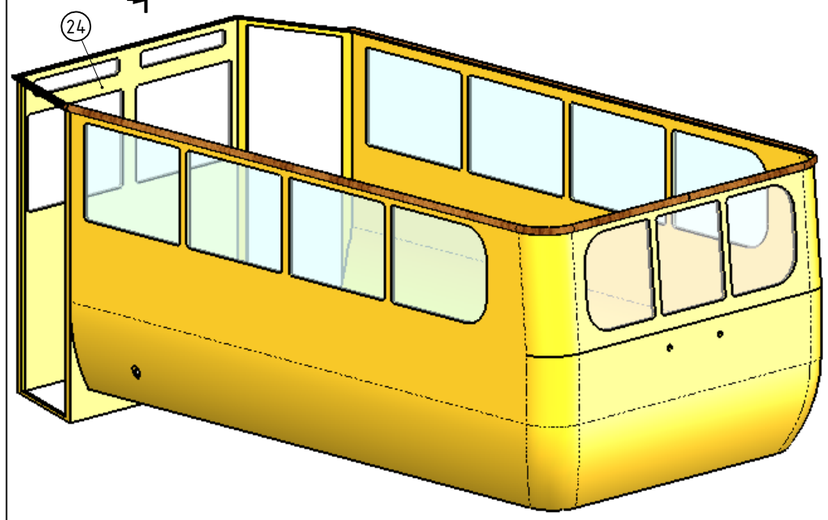

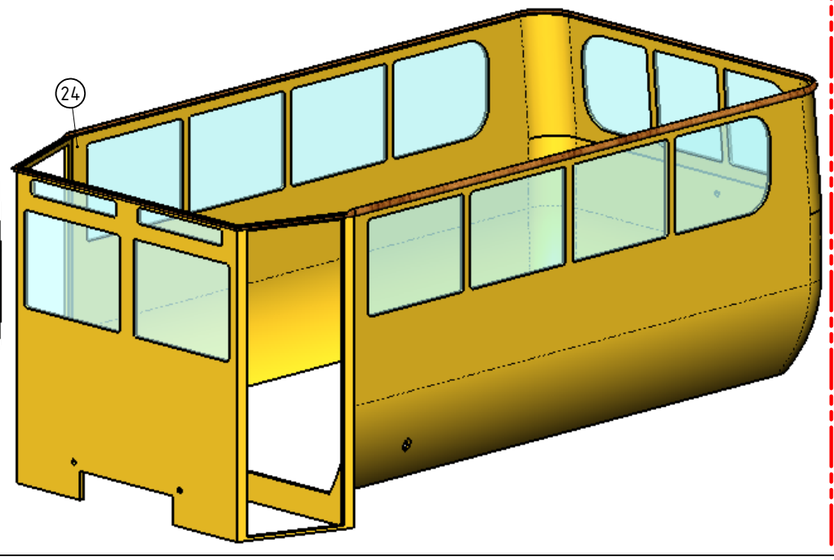

NOTES:

TITLE
IRISH RAILCAR No4 (1928) OF THE COUNTY DONEGAL RAILWAYS JOINT COMMITTEE

DRAWING CONTENTS
PARTS AND ASSEMBLIES

PROJECT No
JDW DRAUGHTING SERVICES
J.A.M. DE WAAL. 12 BRIGHTWELL STREET PAPAKURA 2110. NEW ZEALAND. PHONE: 0064 09 2988815. MOB: 0211791000
E-MAIL: dewaal@xtra.co.nz.

PROJECTION
DATE FEBRUARY 2014
SHEET:04 OF 05

MODEL SCALE: 1:14.4 TRACK 63.5mm
DWG SCALE: 1:1 @A3 OR AS SHOWN
Copyright © J.A.M. DE WAAL PAPAKURA NZ
A3 No: CDRJC-4-64-04

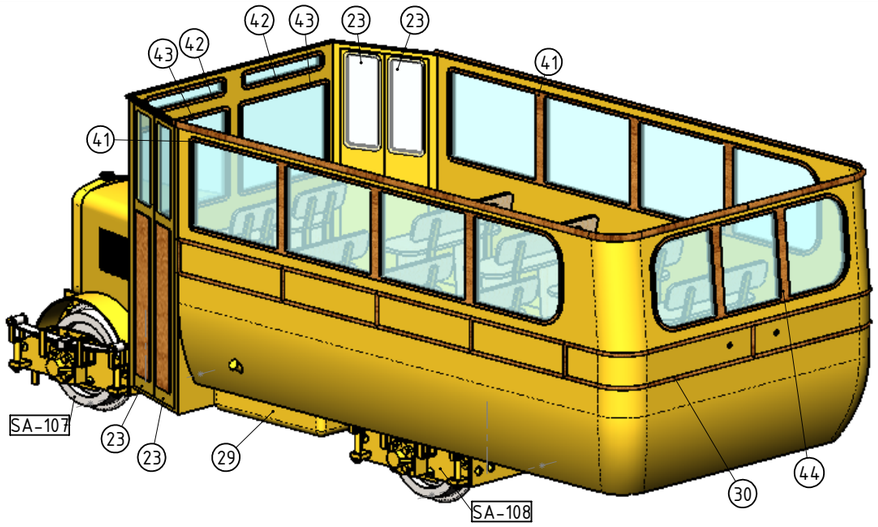

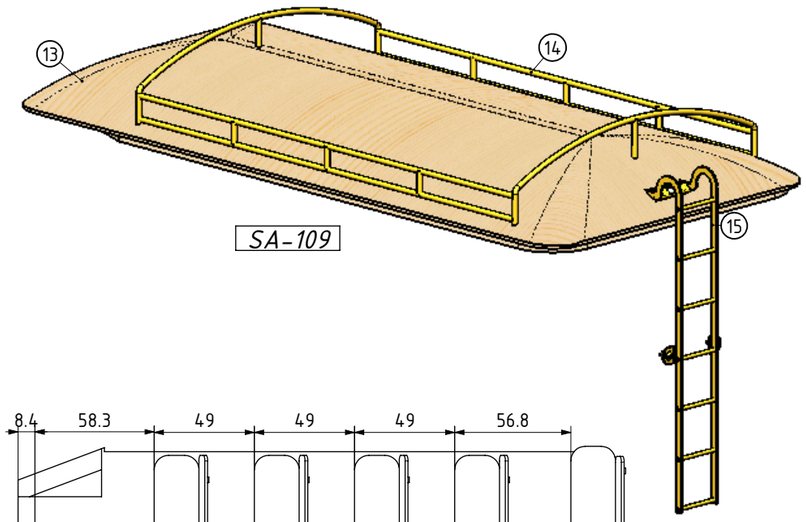

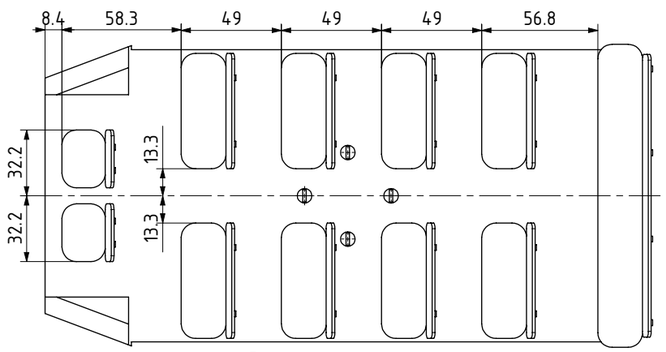

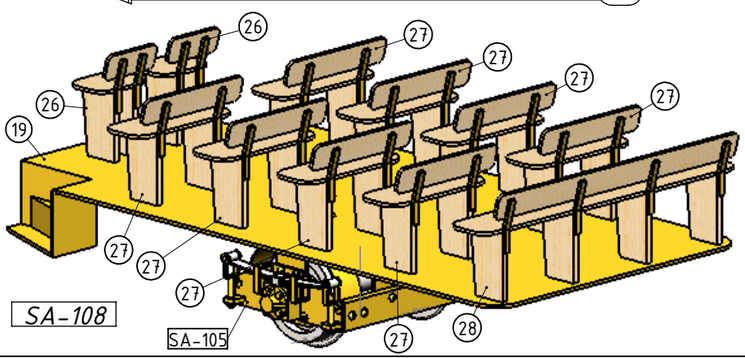

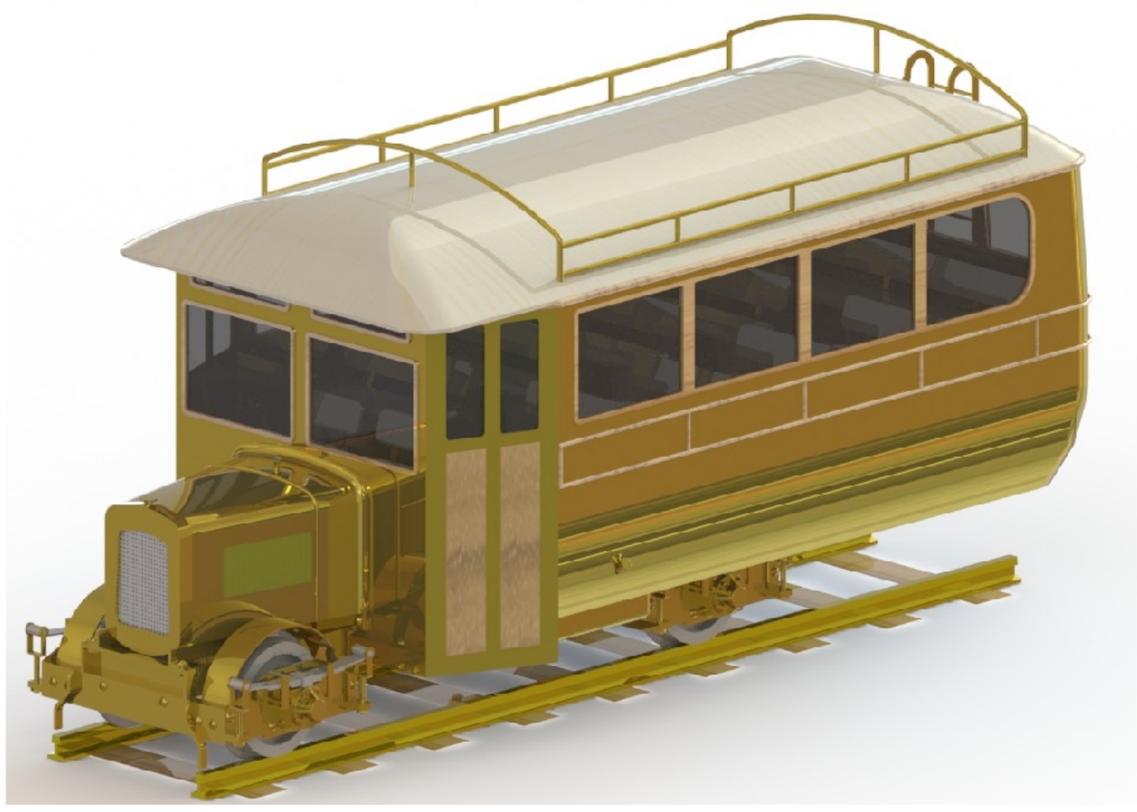

NOTES:

1. ALL ENGINEERING PRACTICES SHALL BE APPLIED WITH REGARDS TO HOLE AND SHAFT TOLERANCES.
2. WHERE SCREWS OR BOLTS ARE USED THE CLEARANCE HOLES SHALL BE APPROXIMATELY 8% TO 10% LARGER THAN THE MATCHING TAPPED HOLE.
3. PREFERABLY ALL TAPPED HOLES TO BE METRIC FINE (MF).
4. MATERIAL SHOWN ON DRAWINGS ARE INDICATIVE ONLY, IT IS UP TO THE BUILDER TO USE MATERIALS WHICH WOULD BE THE MOST SUITED.

ABBREVIATIONS:

RM = REAM.
PF = PRESS FIT
BRS = BRASS.
SPS = SPRING STEEL
BMS = BRIGHT MILD STEEL.
S/S = STAINLESS OF SILVER STEEL.

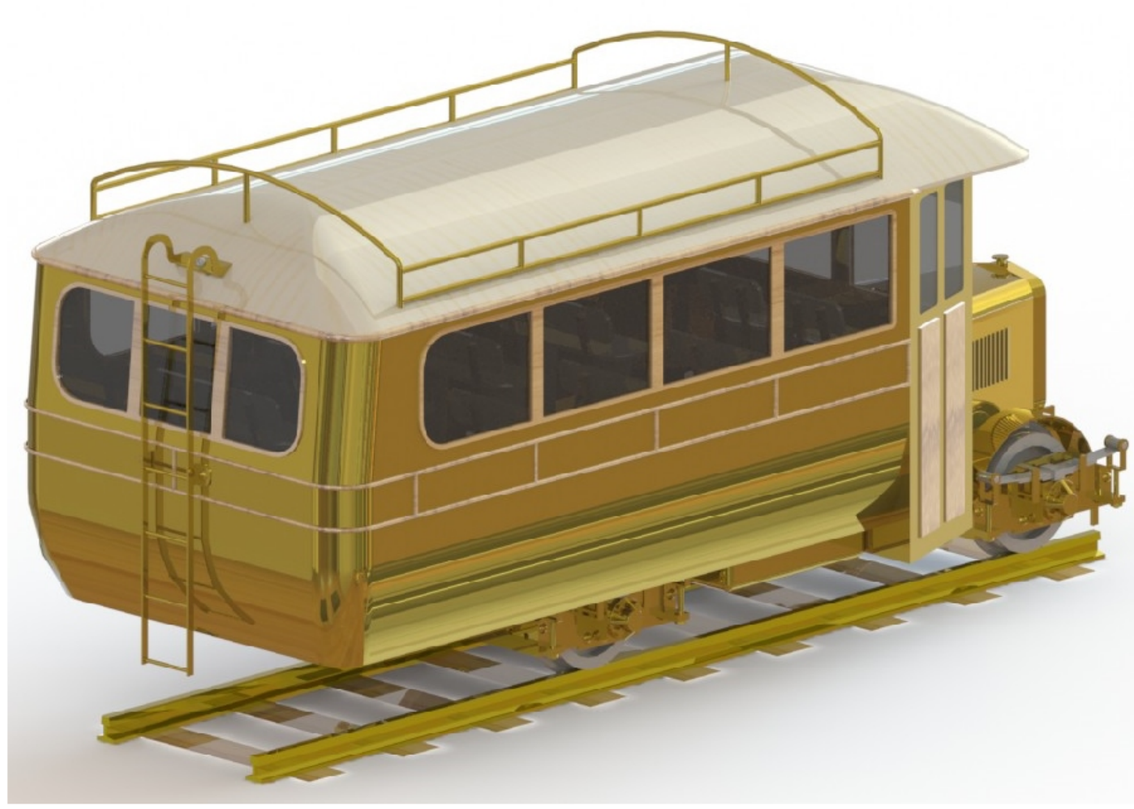

NOTES:

TITLE
IRISH RAILCAR No4 (1928) OF THE COUNTY DONEGAL RAILWAYS JOINT COMMITTEE

DRAWING CONTENTS
ASSEMBLIES AND RENDERED PICURES

PROJECT No
JDW DRAUGHTING SERVICES
J.A.M. DE WAAL. 12 BRIGHTWELL STREET PAPAKURA 2110 NEW ZEALAND. PHONE: 0064 09 2988815. MOB: 0211791000
E-MAIL: dewaal@xtra.co.nz.

PROJECTION
DATE FEBRUARY 2014
SHEET:05 OF 05

MODEL SCALE: 1:14.4 TRACK 63.5mm
DWG SCALE: 1:1 @A3 OR AS SHOWN
Copyright © J.A.M. DE WAAL PAPAKURA NZ
A3 No: CDRJC-4-64-05