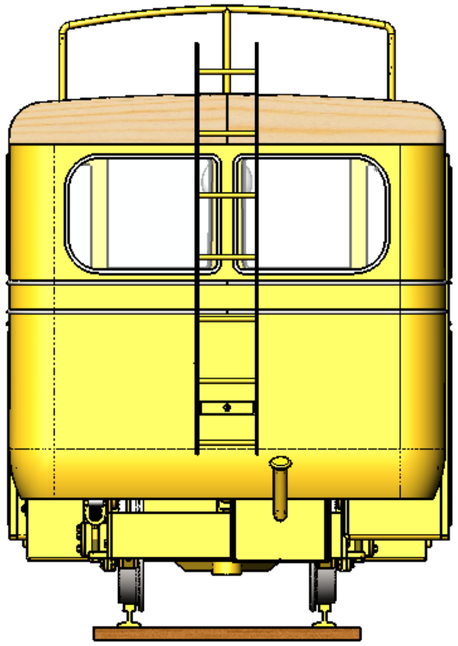

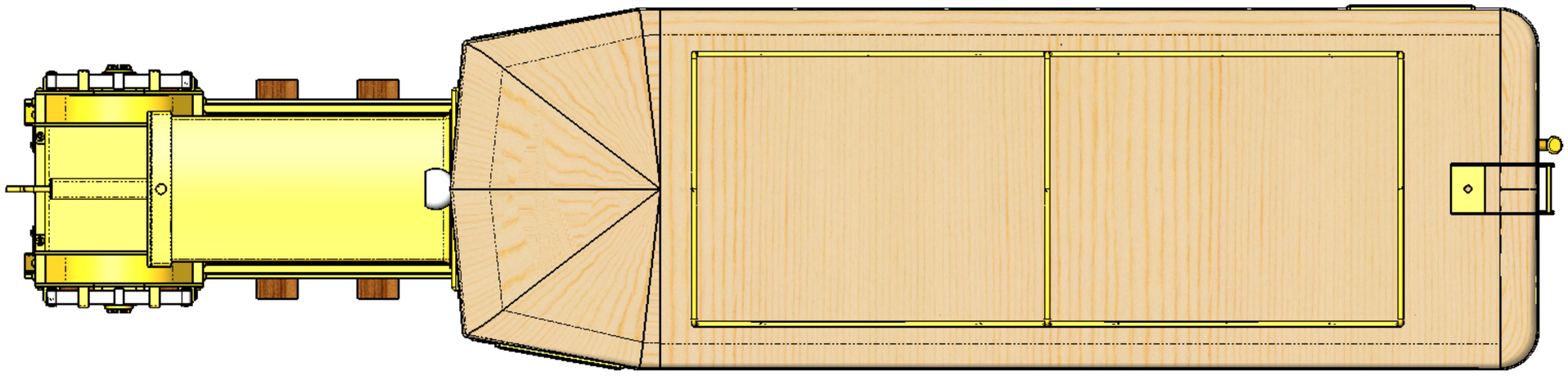

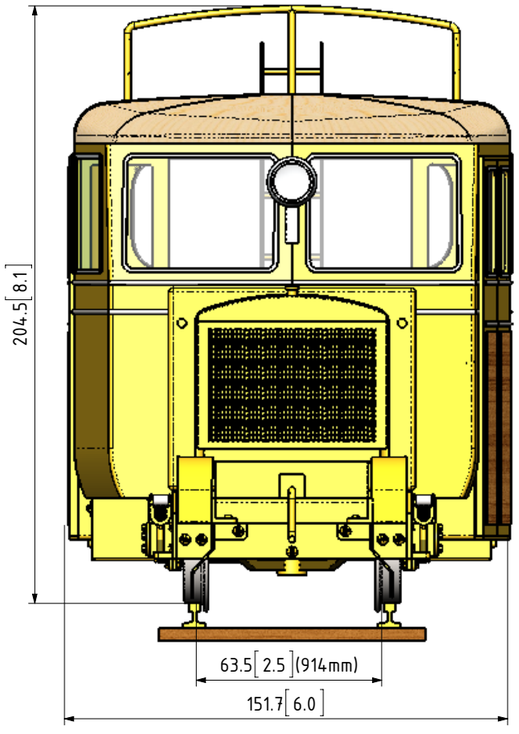

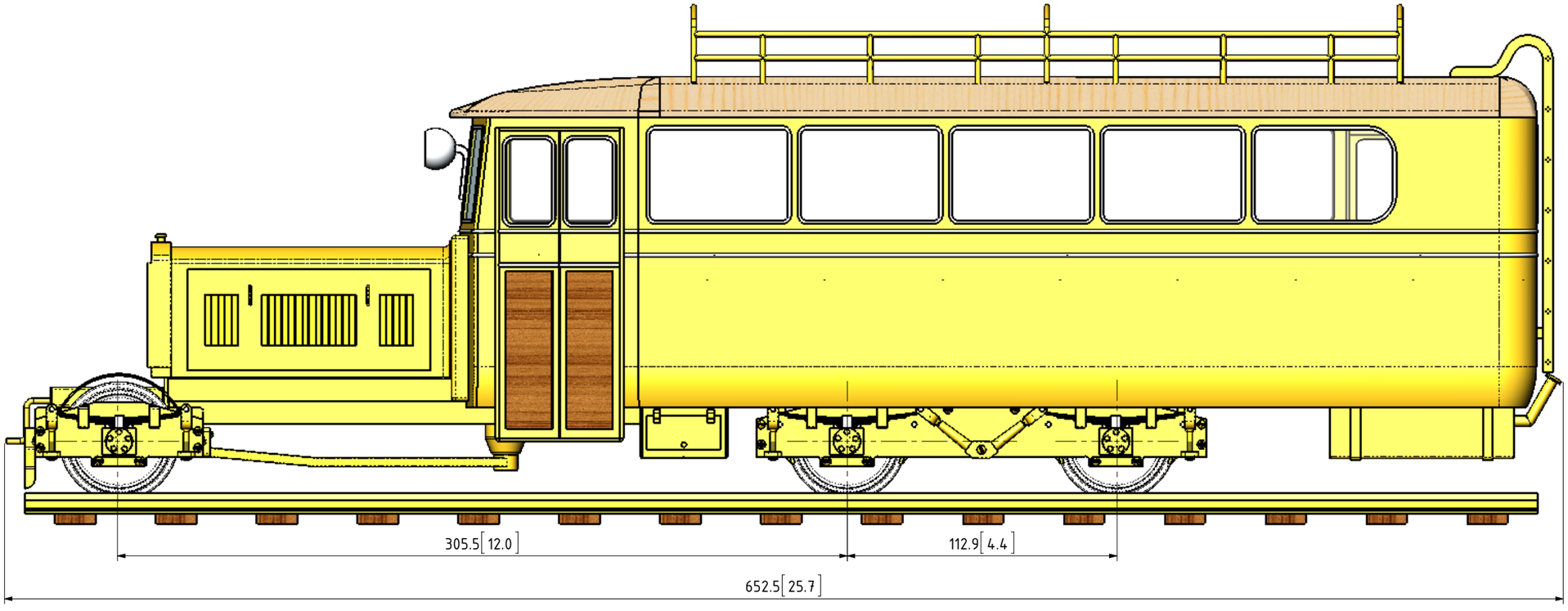

NOTES:

TITLE

IRISH RAILCAR No7 OF THE COUNTY DONEGAL RAILWAY JOINT COMMITTEE

DRAWING CONTENTS

GENERAL ARRANGEMENT

PROJECT No

JDW DRAUGHTING SERVICES

J.A.M. DE WAAL. 12 BRIGHTWELL STREET PAPAKURA 2110. NEW ZEALAND. PHONE: 0064 09 2988815. MOB: 0211791000
E-MAIL: dewaal@xtra.co.nz.

PROJECTION

DATE FEBRUARY-2014

SHEET:01 OF 08

MODEL SCALE: 1:14.4 (GAUGE 63.5mm)

DWG SCALE: NTS @A3 OR AS SHOWN

Copyright © J. DE WAAL PAPAKURA NZ

A3 DWGNo CDRJC7-64-01

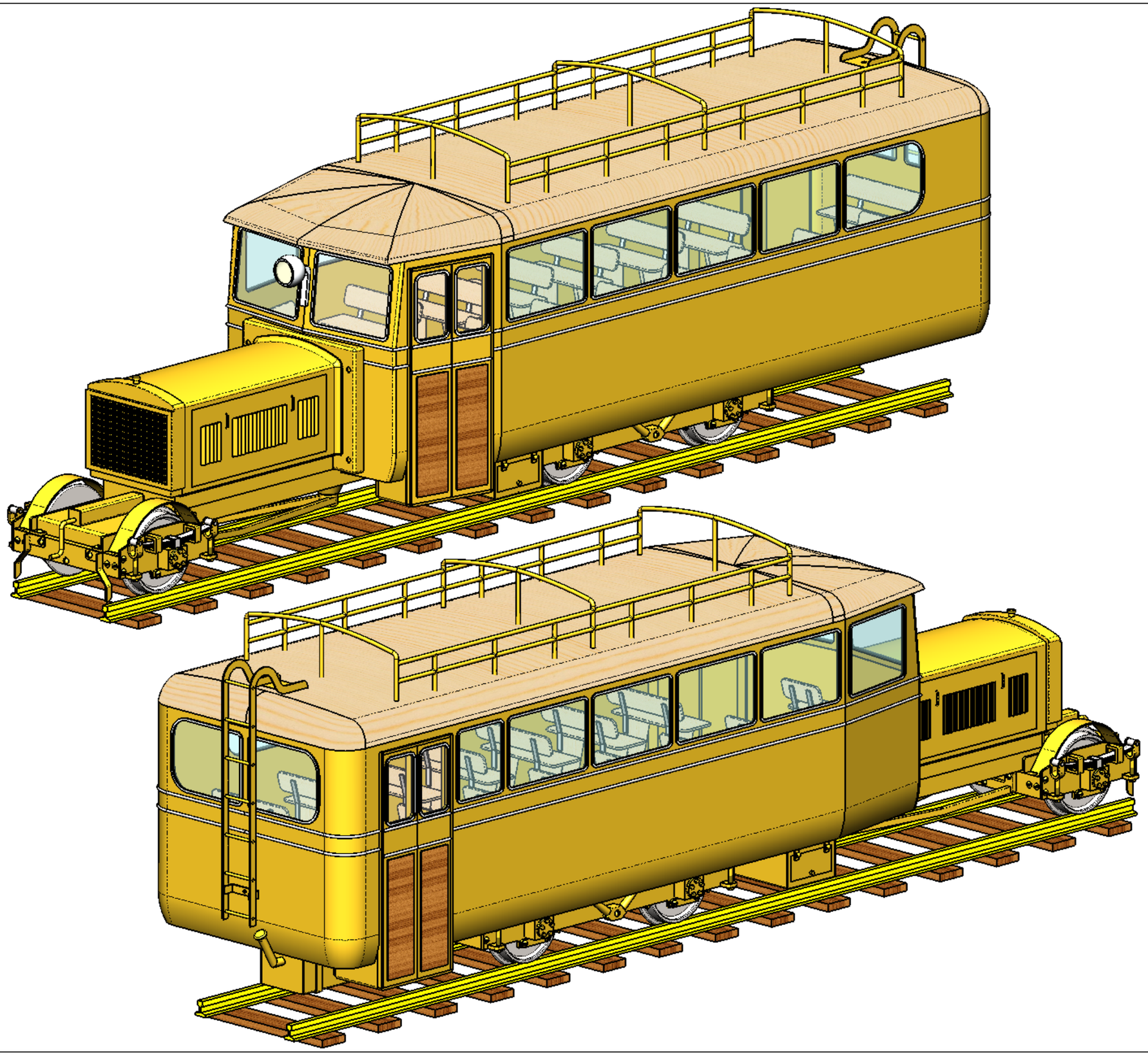

QTY.	PART NUMBER
5	CDRJC7-64-1-01-UF-FLOOR BEAM 5x5x0.5x92
1	CDRJC7-64-1-01-UF-FLOOR BEAM 5x5x0.5x92
1	CDRJC7-64-1-02-UF-FLOOR BEAM 5x5x0.5x265
9	CDRJC7-64-1-03-UF-FLOOR BEAM 5x5x0.5x47
2	CDRJC7-64-1-04-UF-FLOOR BEAM 5x5x0.5x43
1	CDRJC7-64-1-05-UF-FLOOR BEAM 5x5x0.5x215
1	CDRJC7-64-1-06-UF-FLOOR BEAM 5x5x0.5x12
1	CDRJC7-64-1-07-UF-FLOOR BEAM 5x5x0.5x38
2	CDRJC7-64-1-10-UF-FLOOR BEAM 7x5x0.5x22
2	CDRJC7-64-1-11-UF-FLOOR BEAM 7x5x0.5x140
1	CDRJC7-64-1-13-UF-FLOOR BEAM 12x5x0.5x22
1	CDRJC7-64-1-14-UF-BOGIE MOUNTING PLATE
1	CDRJC7-64-1-15-UF-REAR EXIT STEPS
1	CDRJC7-64-1-16-UF-FRONT ENTRY STEPS
1	CDRJC7-64-1-17-UF-LUGGAGE COMPAERTMENT
2	CDRJC7-64-1-18-UF-LUGGAGE COMPARTMENT DOOR
1	CDRJC7-64-1-19-UF-FUEL TANK
1	CDRJC7-64-1-20-UF-FUEL TANK FILLER
2	CDRJC7-64-1-21-UF-FUEL TANK STRAP
1	CDRJC7-64-1-22-UF-FRONT BOGIE PIVOT BEARING
2	CDRJC7-64-2-01-BG-FRONT BOGIE SIDE FRAME
2	CDRJC7-64-2-02-BG-FRONT BOGIE FRONT AND REAR PLATE
2	CDRJC7-64-2-03-BG-FRONT BOGIE ANGLE BRACKET
1	CDRJC7-64-2-04-BG-FRONT BOGIE LH-RAIL SCOOP
1	CDRJC7-64-2-05-BG-FRONT BOGIE RH-RAIL SCOOP
2	CDRJC7-64-2-06-BG-FRONT BOGIE LEAF SPRING
1	CDRJC7-64-2-07-BG-FRONT BOGIE SWING ARM
2	CDRJC7-64-2-08-BG-FRONT BOGIE WHEEL SPLASHER
6	CDRJC7-64-2-10-BG-BOGIES AXLE BOX KEEPER
6	CDRJC7-64-2-11-BG-BOGIES AXLE BOX
12	CDRJC7-64-2-12-BG-BOGIES LEAF SPRING BRACKET
3	CDRJC7-64-2-13-BG-BOGIES WHEEL AXLE
6	CDRJC7-64-2-14-BG-BOGIES WHEEL
2	CDRJC7-64-2-20-BG-REAR BOGIE SIDE FRAME
2	CDRJC7-64-2-21-BG-REAR BOGIE FRONT AND REAR PLATE
4	CDRJC7-64-2-22-BG-REAR BOGIE LEAF SPRING
2	CDRJC7-64-2-23-BG-REAR BOGIE LEAF SPRING PIVOT BEARING
1	CDRJC7-64-2-24-BG-REAR BOGIE CENTER BRIDGE
8	CDRJC7-64-2-25-BG-REAR BOGIE BRAKE SHOE
8	CDRJC7-64-2-26-BG-REAR BOGIE BRAKE SHOE LEVER
4	CDRJC7-64-2-27-BG-REAR BOGIE BRAKE LEVER CROSS ROD
4	CDRJC7-64-2-28-BG-REAR BOGIE BRAKE LEVER AIR CULINDER CROSS ROD
2	CDRJC7-64-2-29-REAR BOGIE BRAKE AIR CYLINDER
1	CDRJC7-64-2-30-BG-REAR BOGIE AIR CYLINDER MOUNTING BRACKET
1	CDRJC7-64-3-01-EC-BASE PLATE
1	CDRJC7-64-3-02-EC-HOOD
2	CDRJC7-64-3-03-EC-SIDE VENTILATION LOUVRES
4	CDRJC7-64-3-04-EC-5 VENTS
2	CDRJC7-64-3-05-EC-14 VENTS
1	CDRJC7-64-3-06-EC-RADIATOR
1	CDRJC7-64-3-07-EC-RADIATOR COOLING FINS
1	CDRJC7-64-3-08-EC-FRONT COVER PLATE
1	CDRJC7-64-3-09-EC-STARTING CRANK HANDLE TUBE
1	CDRJC7-64-3-10-EC-STARTIG CRANK HANDLE
1	CDRJC7-64-3-11-EC-HOOD TO COMPARTMENT MOUNTING PLATE
1	CDRJC7-64-4-01-PC-FLOOR
1	CDRJC7-64-4-02-PC-COMPARTMENT
1	CDRJC7-64-4-03-PCFRONT WINDOW PANEL
1	CDRJC7-64-4-03-PCFRONT WINDOW PANEL
1	CDRJC7-64-4-04-PC-FRONT AND REAR DOOR SIDE FRAME
3	CDRJC7-64-4-04-PC-FRONT AND REAR DOOR SIDE FRAME
1	CDRJC7-64-4-05-PC-FRONT DOOR LINTEL
1	CDRJC7-64-4-06-PC-REAR DOOR LINTEL
2	CDRJC7-64-4-07-PC-REAR DOOR
2	CDRJC7-64-4-08-PC-FRONT DOO
2	CDRJC7-64-4-09-PC-FRONT WINDOW AND TRIM
2	CDRJC7-64-4-10-PC-REAR WINDOW AND TRIM
8	CDRJC7-64-4-11-PC-LARGE SIDE WINDOW AND TRIM
1	CDRJC7-64-4-12-PC-REAR SIDE WINDOW AND TRIM
1	CDRJC7-64-4-13-PC-FRONT SIDE WINDOW AND TRIM
1	CDRJC7-64-4-14-PC-SMALL SIDE WINDOW AND TRIM
1	CDRJC7-64-4-15-PC-DRIVERS SEAT
14	CDRJC7-64-4-16-PC-PASSENGERS SEAT
1	CDRJC7-64-4-17-PC-REAR PASSENGERS SEAT
1	CDRJC7-64-4-18-PC-ROOF
1	CDRJC7-64-4-19-PCROOF RACK
1	CDRJC7-64-4-20-PC-REAR LADDER
1	CDRJC7-64-4-21-PC-HEAD LIGHT
2	CDRJC7-64-4-22-PC-BODY TRIM
34	CDRJC7-64-M1.5 NUT
23	CDRJC7-64-M1.5x3 R-HEAD SCREW
31	CDRJC7-64-M1.5x5 R-HEAD SCREW
2	CDRJC7-64-M1.5x6.5 R-HEAD SCREW
1	CDRJC7-64-RAIL TRACK 045mm (1.77in)

NOTES:

TITLE

IRISH RAILCAR No7 OF THE COUNTY DONEGAL RAILWAY JOINT COMMITTEE

DRAWING CONTENTS

ISOMETRIC VIEWS AND BILL OF MATERIALS

PROJECT No
JDW DRAUGHTING SERVICES
J.A.M. DE WAAL. 12 BRIGHTWELL STREET PAPAKURA 2110.
NEW ZEALAND. PHONE: 0064 09 2988815. MOB: 0211791000
E-MAIL: dewaal@xtra.co.nz.

PROJECTION

DATE FEBRUARY 2014

SHEET:02 OF 08

MODEL SCALE: 1:14.4 (GAUGE 63.5mm)

DWG SCALE: NTS @A3 OR AS SHOWN

Copyright © J. DE WAAL PAPAKURA NZ

A3

DWGNo CDRJC7-64-02

ALL 0.5mm WALL

OPPOSITE FACE EQUAL

1.4mm THICK SCALE 1:2

ONE SIDE ONLY

1.4mm THICK PLATE SCALE 1:2

SCALE 1:1.5

SECTION A-A SCALE 1 : 1.5

OTHER DIMENSIONS AS PER PART 1-15

1.4mm THICK

REFER TO PART 2-06 FOR ALL OTHER DIMENSION DETAILS

MIRROR IMAGE OF PART 2-04

ALL ∅2.1mm

ANGLE 8.5x8.5x1.4

ALL ∅2.1

ALL M2x7.1 DEEP

1.4mm THICK REFER TO PART 2-01 FOR ALL OTHER DIMENSION DETAILS

NOTES:

TITLE: IRISH RAILCAR No7 OF THE COUNTY DONEGAL RAILWAY JOINT COMMITTEE	DRAWING CONTENTS: PARTS AND ASSEMBLIES	PROJECT No: JDW DRAUGHTING SERVICES	MODEL SCALE: 1:14.4 (GAUGE 63.5mm)
		J.A.M. DE WAAL. 12 BRIGHTWELL STREET PAPAKURA 2110. NEW ZEALAND. PHONE: 0064 09 2988815. MOB: 0211791000 E-MAIL: dewaal@xtra.co.nz.	DWG SCALE: 1:1 @A3 OR AS SHOWN
		PROJECTION	Copyright © J. DE WAAL PAPAKURA NZ
		DATE FEBRUARY 2014	SHEET:03 OF 08
		A3	DWGNo CDRJC7-64-03

NOTES:

TITLE
IRISH RAILCAR No7 OF THE COUNTY DONEGAL RAILWAY JOINT COMMITTEE

DRAWING CONTENTS
PARTS AND ASSEMBLIES

PROJECT No
JDW DRAUGHTING SERVICES
J.A.M. DE WAAL. 12 BRIGHTWELL STREET PAPAKURA 2110. NEW ZEALAND. PHONE: 0064 09 2988815. MOB: 0211791000
E-MAIL: dewaal@xtra.co.nz.

PROJECTION

DATE FEBRUARY-2014

SHEET:04 OF 08

MODEL SCALE: 1:14.4 (GAUGE 63.5mm)

DWG SCALE: 1:1 @A3 OR AS SHOWN

Copyright © J. DE WAAL PAPAKURA NZ

A3 DWGNo CDRJC7-64-04

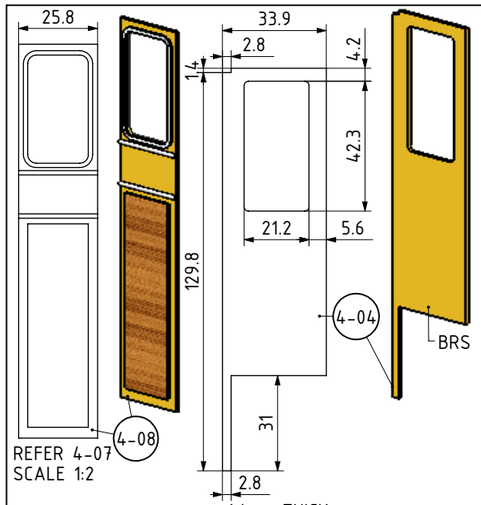

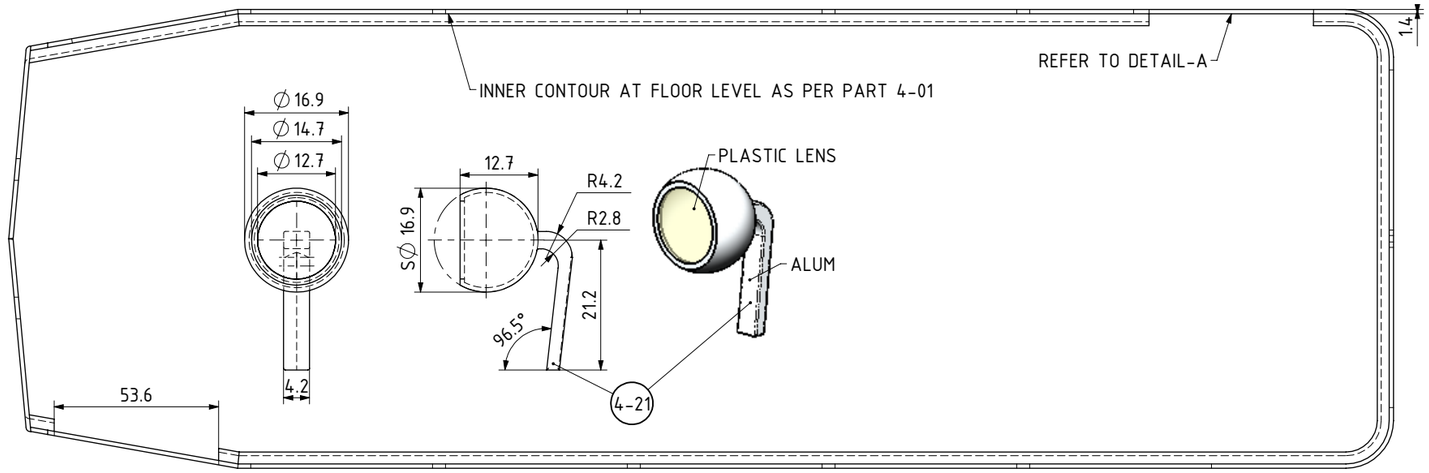

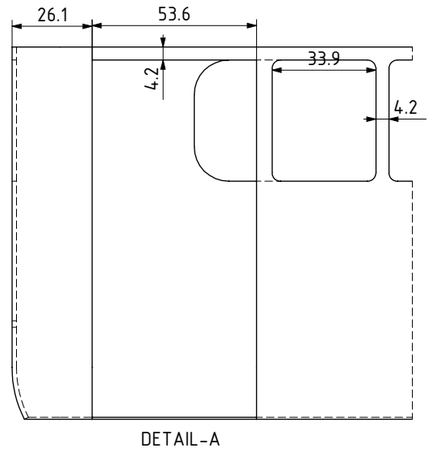

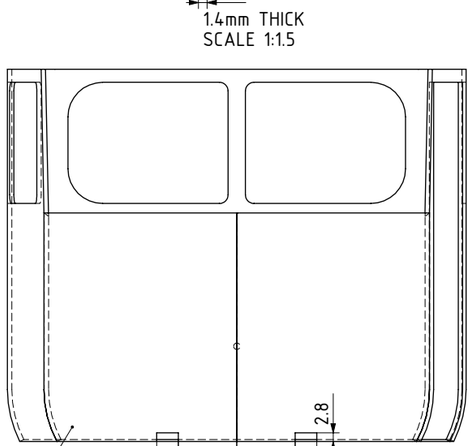

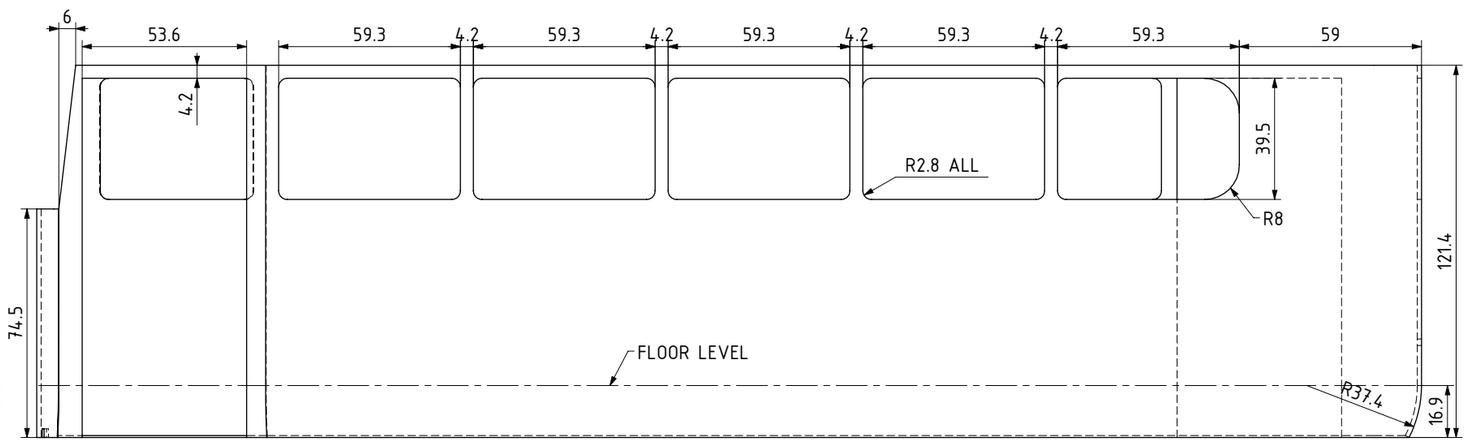

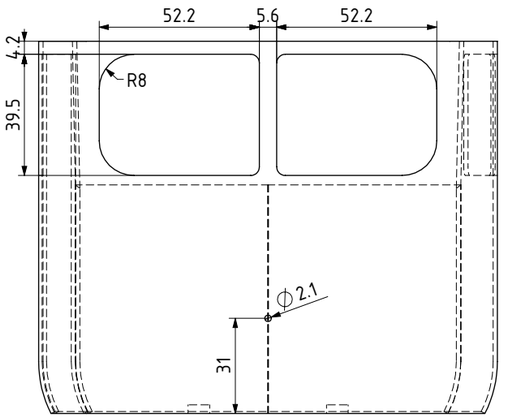

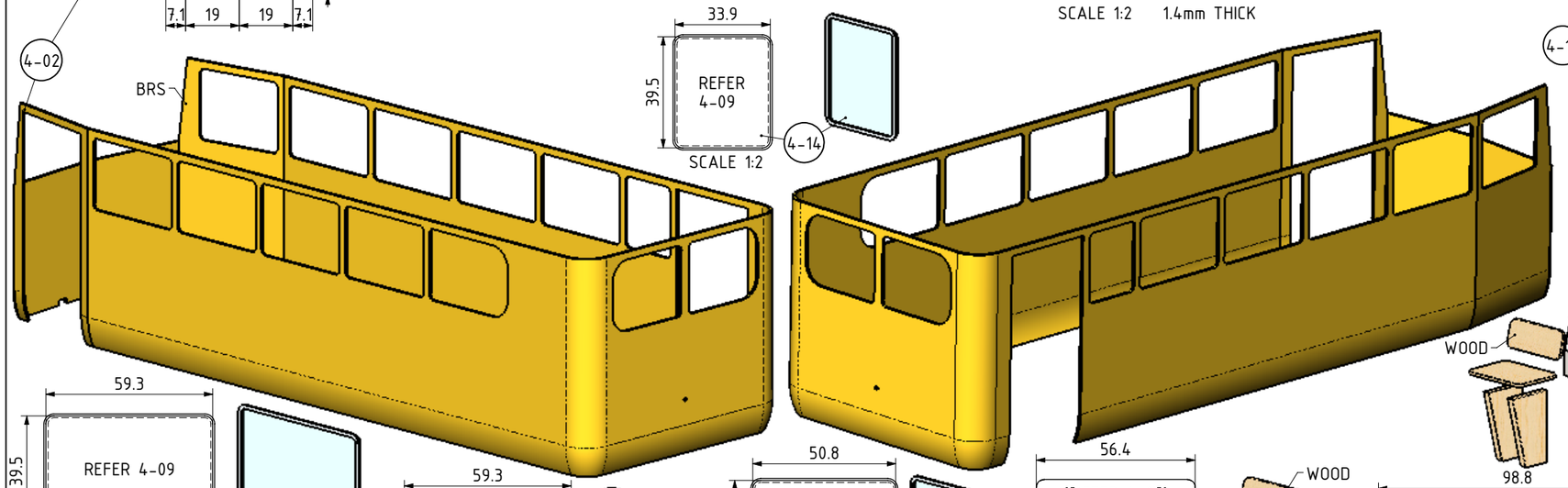

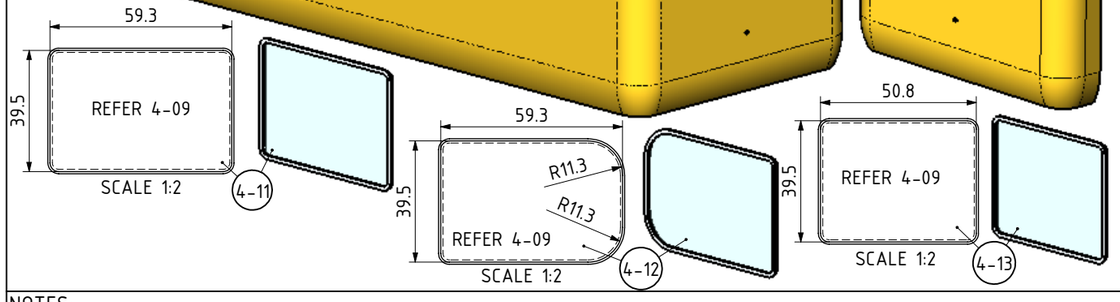

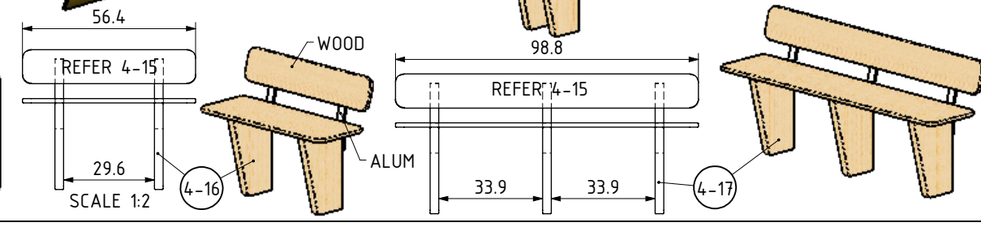

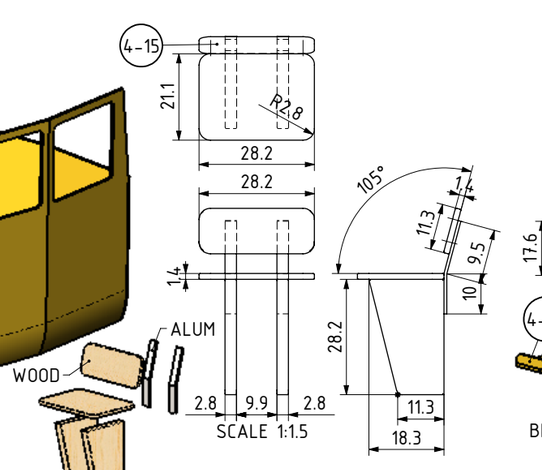

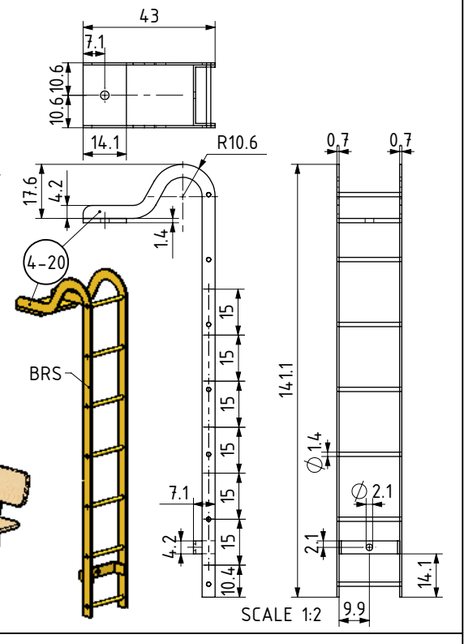

NOTES:

TITLE
IRISH RAILCAR No7 OF THE COUNTY DONEGAL RAILWAY JOINT COMMITTEE

DRAWING CONTENTS
PARTS AND ASSEMBLIES

PROJECT No
JDW DRAUGHTING SERVICES
J.A.M. DE WAAL. 12 BRIGHTWELL STREET PAPAKURA 2110. NEW ZEALAND. PHONE: 0064 09 2988815. MOB: 0211791000
E-MAIL: dewaal@xtra.co.nz.

PROJECTION
DATE FEBRUARY-2014
SHEET:05 OF 08

MODEL SCALE: 1:14.4 (GAUGE 63.5mm)
DWG SCALE: 1:1 @A3 OR AS SHOWN
Copyright © J. DE WAAL PAPAKURA NZ
A3 DWGNo CDRJC7-64-05

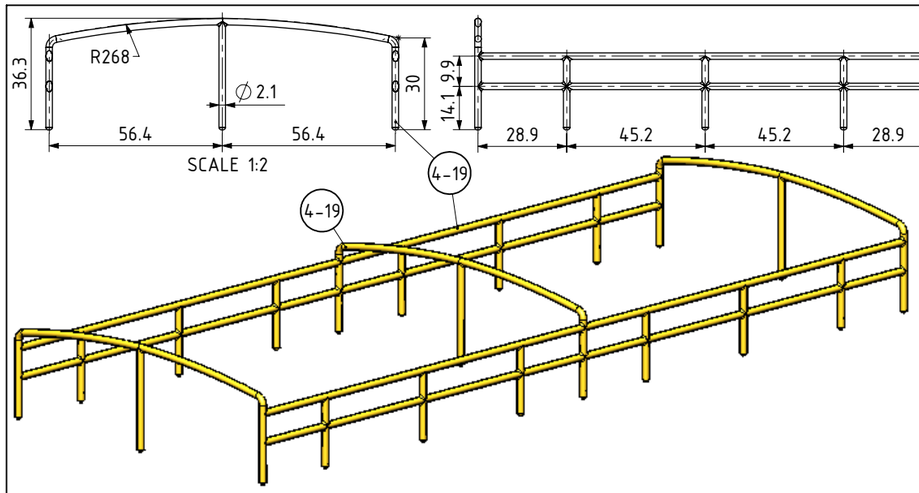

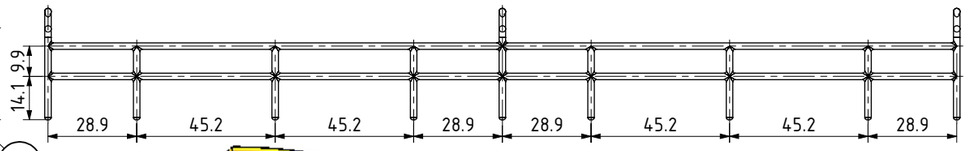

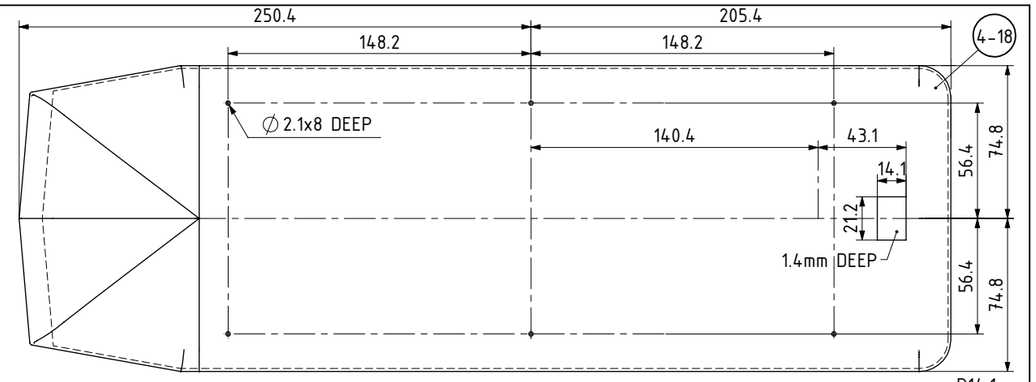

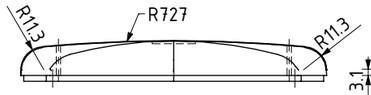

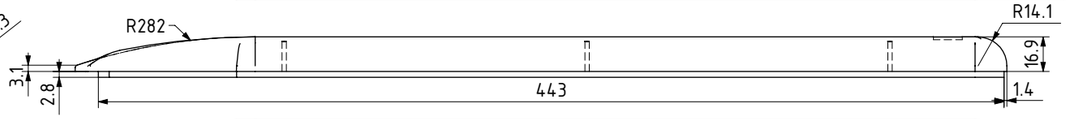

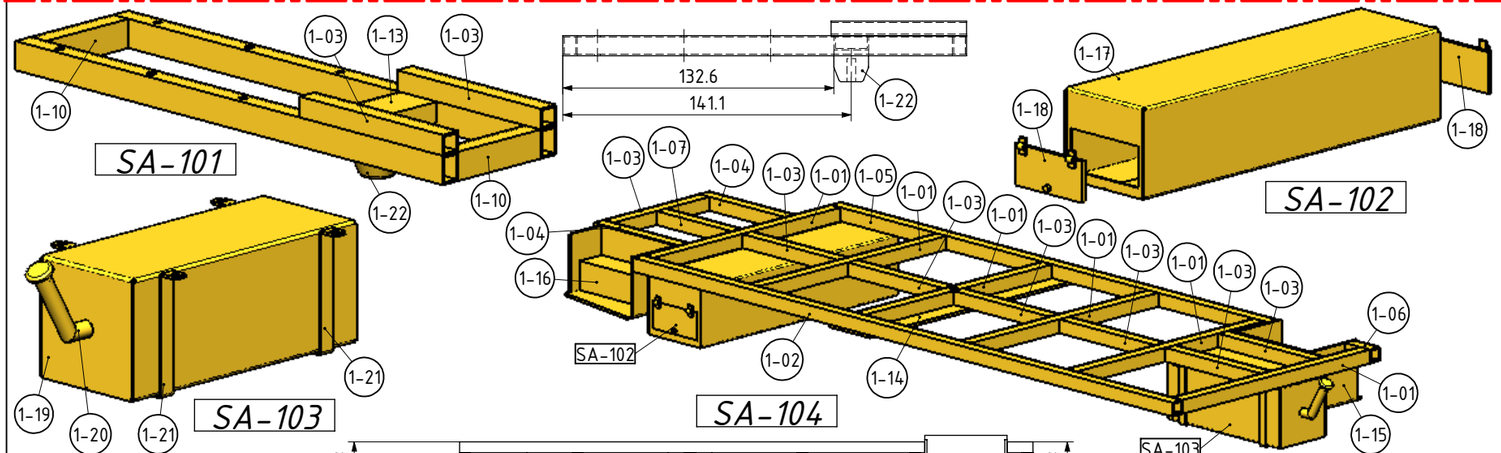

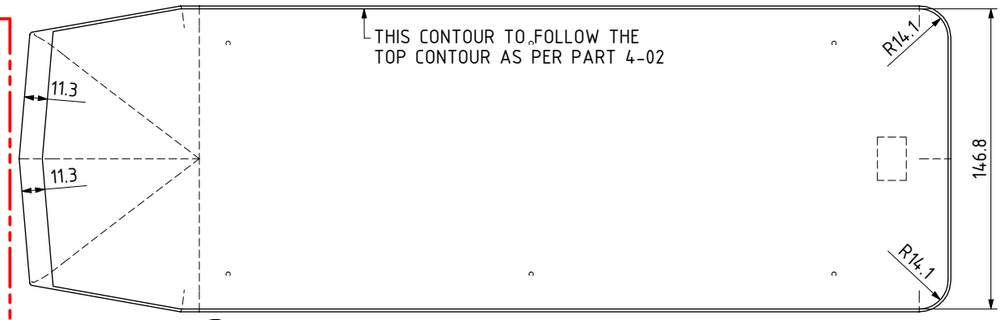

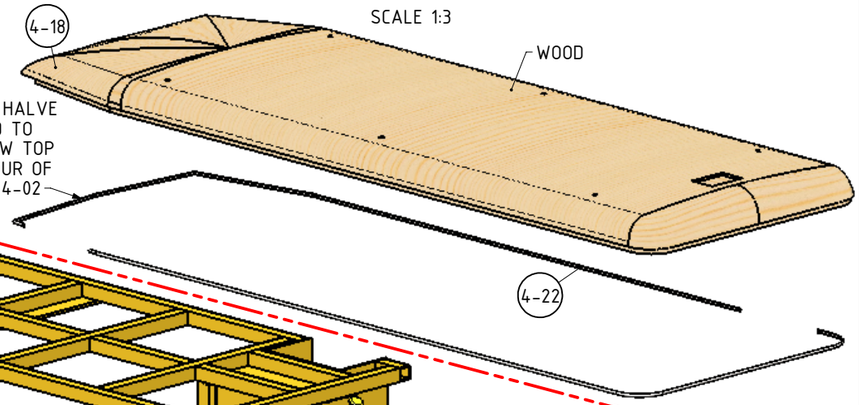

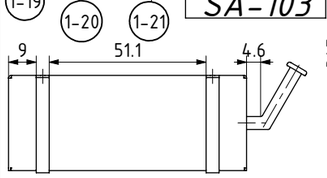

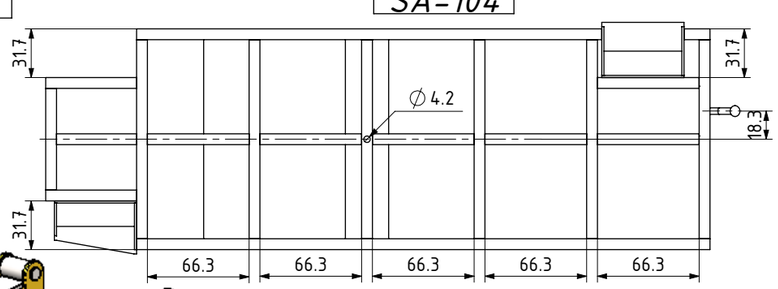

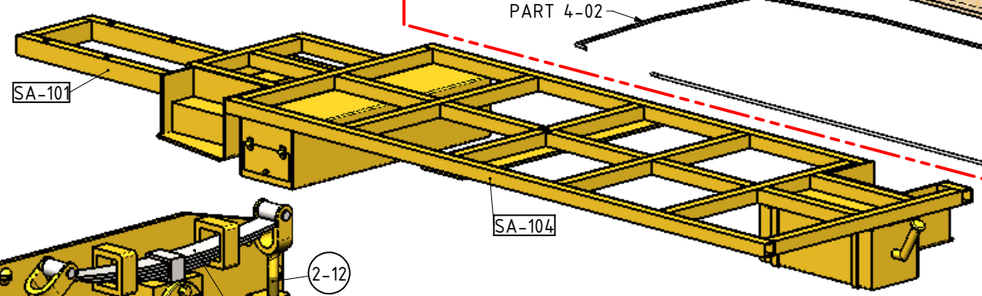

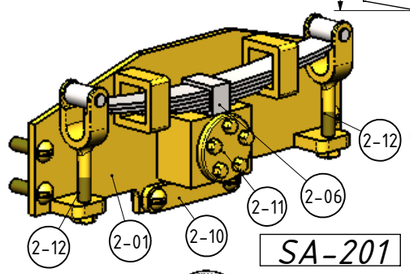

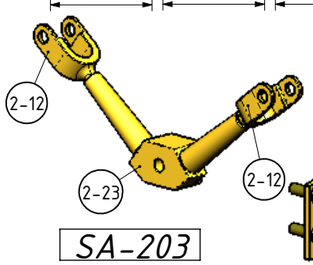

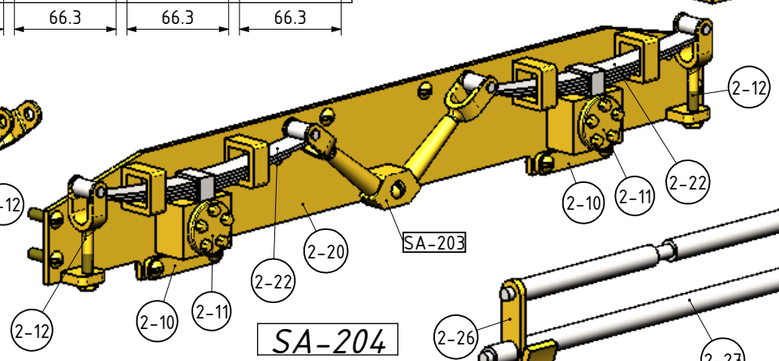

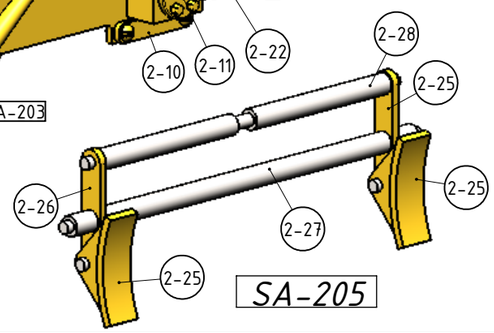

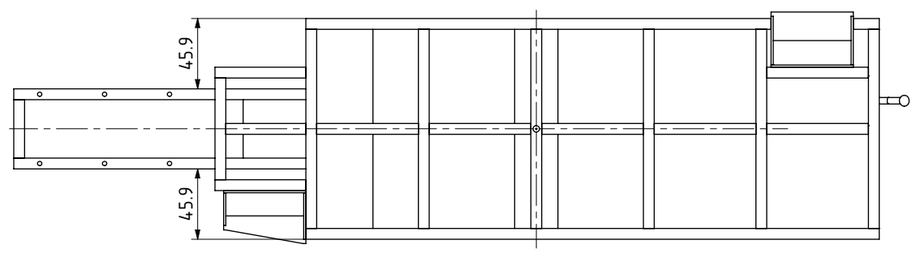

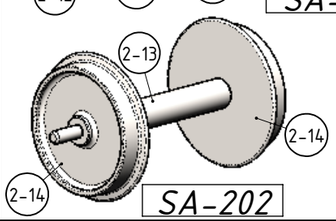

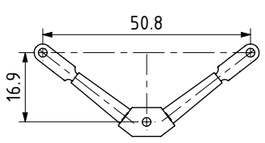

NOTES:

TITLE
IRISH RAILCAR No7 OF THE COUNTY DONEGAL RAILWAY JOINT COMMITTEE

DRAWING CONTENTS
PARTS AND ASSEMBLIES

PROJECT No
JDW DRAUGHTING SERVICES
J.A.M. DE WAAL. 12 BRIGHTWELL STREET PAPAKURA 2110. NEW ZEALAND. PHONE: 0064 09 2988815. MOB: 0211791000
E-MAIL: dewaal@xtra.co.nz.

PROJECTION
DATE FEBRUARY-2014
SHEET:06 OF 08

MODEL SCALE: 1:14.4 (GAUGE 63.5mm)
DWG SCALE: 1:1 @A3 OR AS SHOWN
Copyright © J. DE WAAL PAPAKURA NZ
A3 DWGNo CDRJC7-64-06

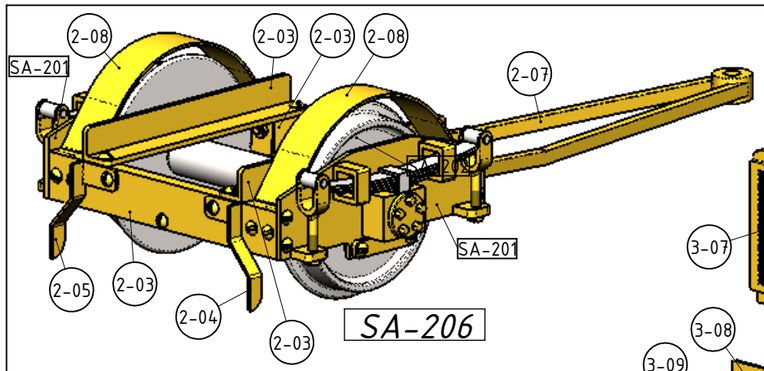

SA-206

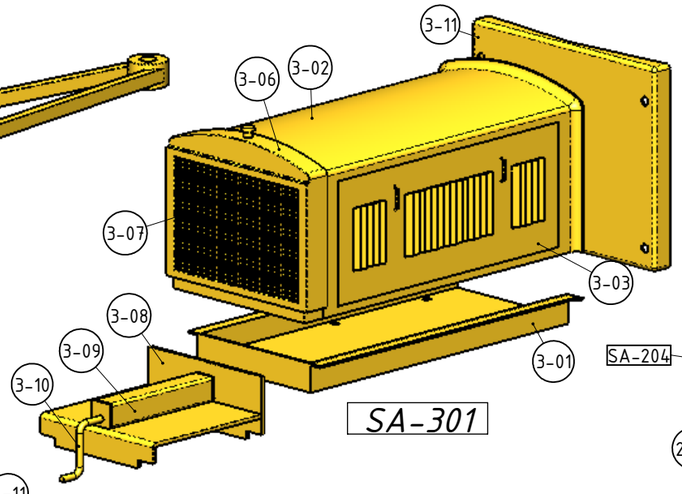

SA-301

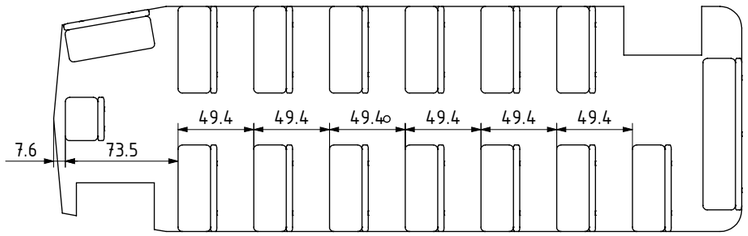

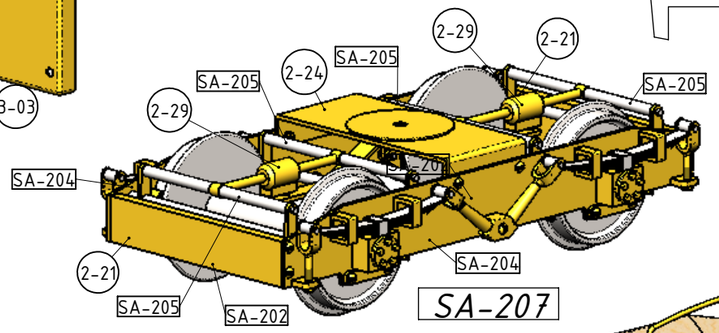

SA-207

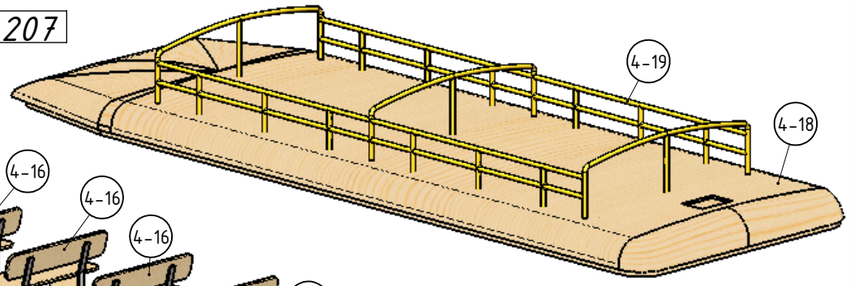

SA-403

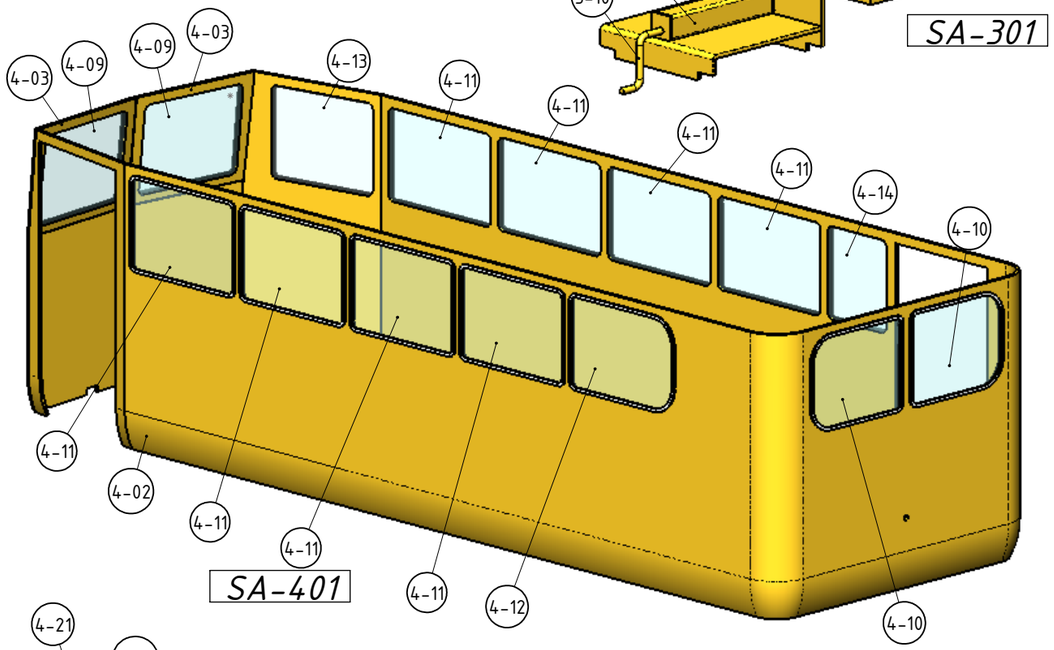

SA-401

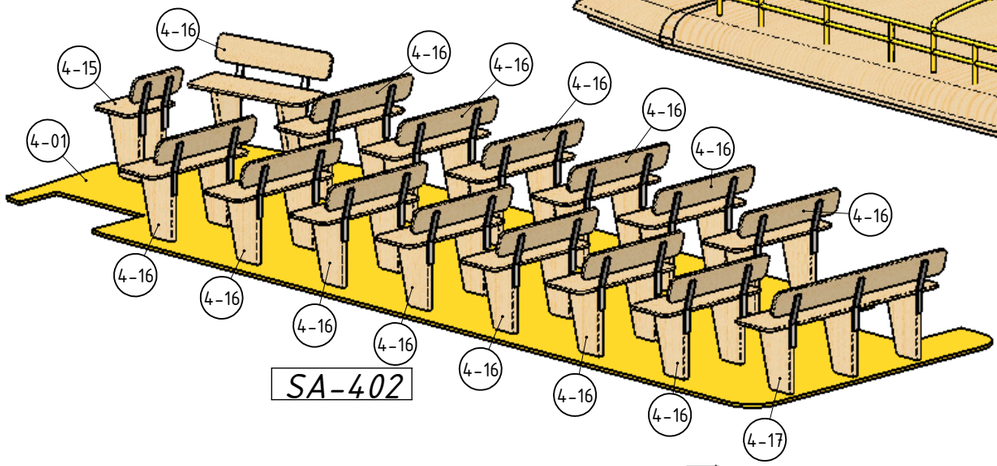

SA-402

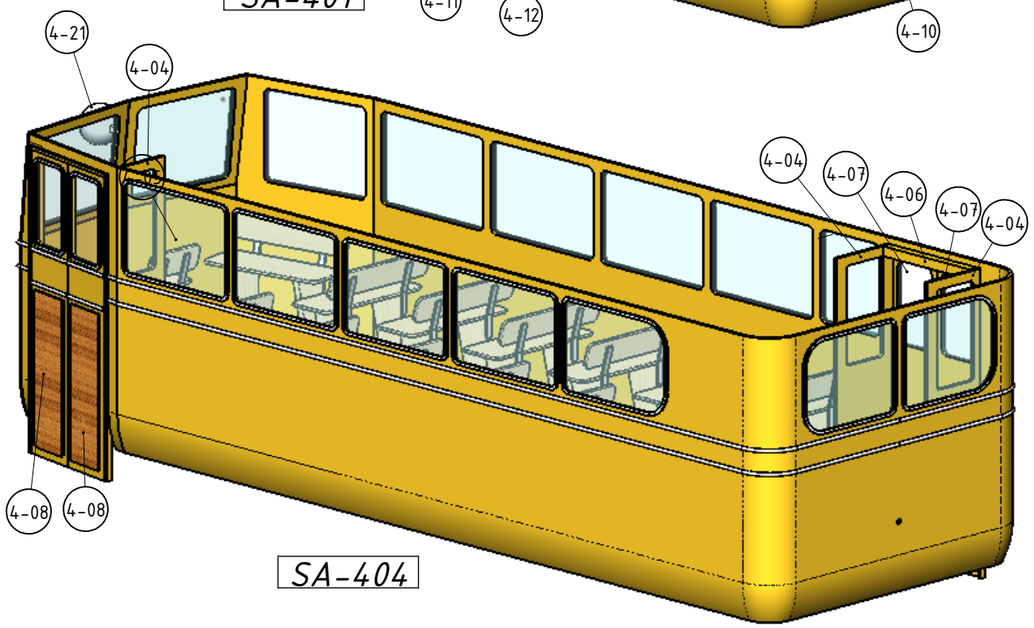

SA-404

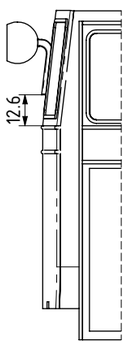

SA-404

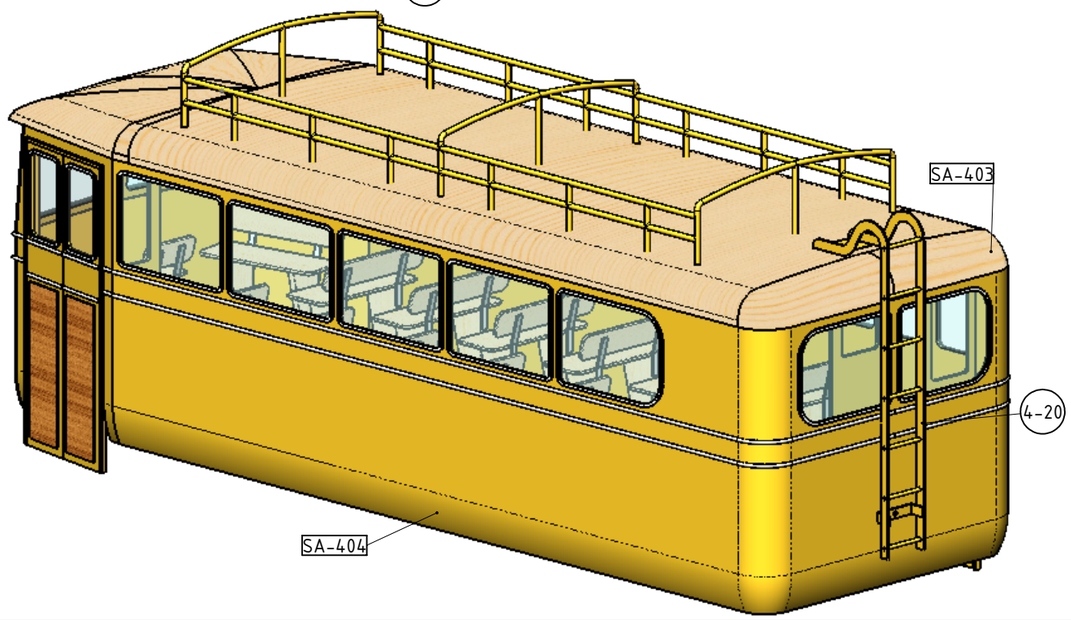

NOTES:

TITLE
IRISH RAILCAR No7 OF THE COUNTY DONEGAL RAILWAY JOINT COMMITTEE

DRAWING CONTENTS
PARTS AND ASSEMBLIES

PROJECT No
JDW DRAUGHTING SERVICES
J.A.M. DE WAAL. 12 BRIGHTWELL STREET PAPAKURA 2110. NEW ZEALAND. PHONE: 0064 09 2988815. MOB: 0211791000
E-MAIL: dewaal@xtra.co.nz.

PROJECTION
DATE FEBRUARY-2014
SHEET:07 OF 08

MODEL SCALE: 1:14.4 (GAUGE 63.5mm)
DWG SCALE: 1:1 @A3 OR AS SHOWN
Copyright © J. DE WAAL PAPAKURA NZ
A3 DWGNo CDRJC7-64-07

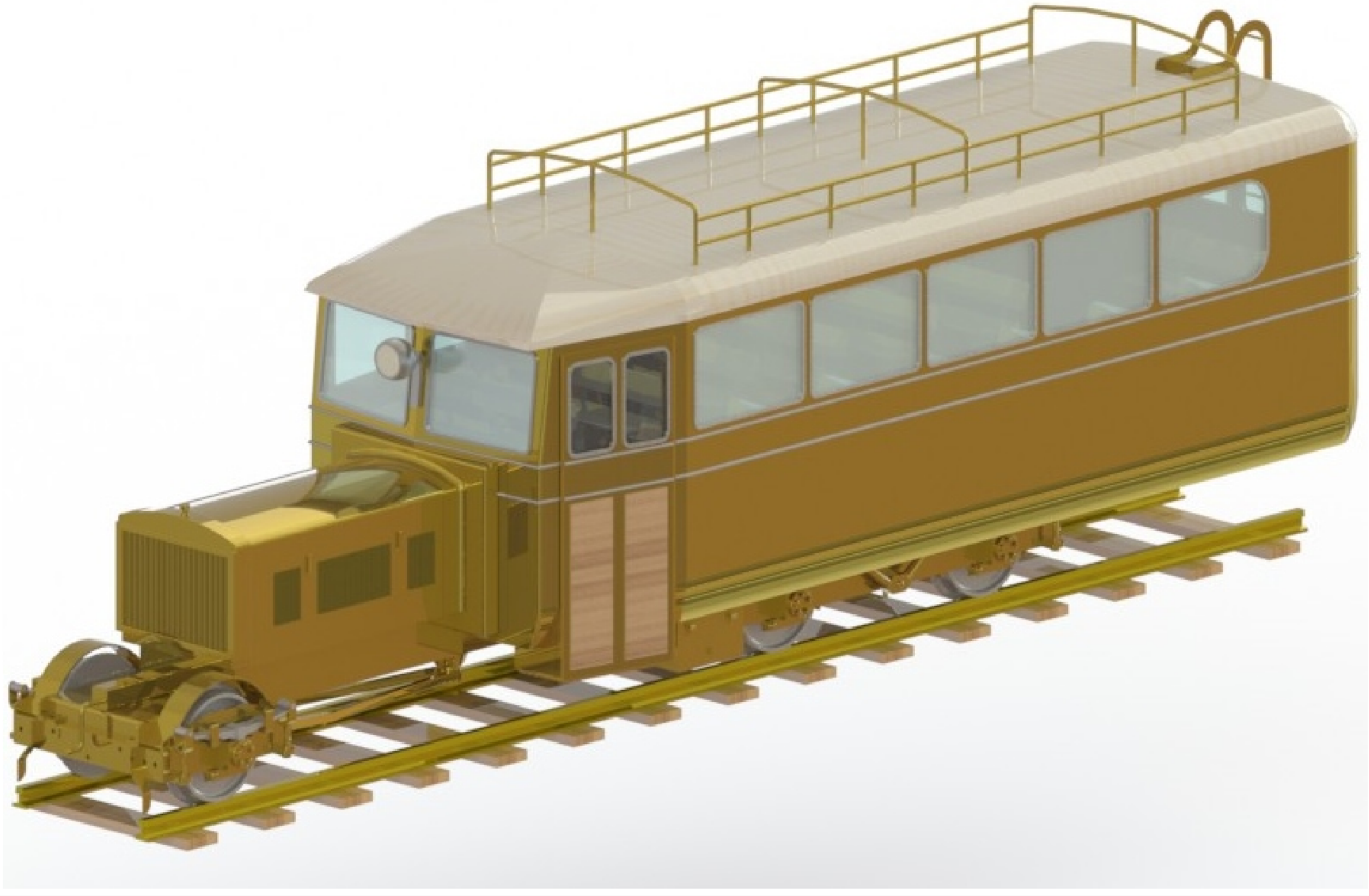

NOTES:

TITLE
IRISH RAILCAR No7 OF THE COUNTY DONEGAL RAILWAY JOINT COMMITTEE

DRAWING CONTENTS
RENDERED ISOMETRIC VIEW

PROJECT No

JDW DRAUGHTING SERVICES
J.A.M. DE WAAL. 12 BRIGHTWELL STREET PAPAKURA 2110. NEW ZEALAND. PHONE: 0064 09 2988815. MOB: 0211791000
E-MAIL: dewaal@xtra.co.nz.

PROJECTION

DATE FEBRUARY-2014

SHEET:08 OF 08

MODEL SCALE: 1:14.4 (GAUGE 63.5mm)

DWG SCALE: NTS @A3 OR AS SHOWN

Copyright © J. DE WAAL PAPAKURA NZ

A3

DWGNo CDRJC7-64-08