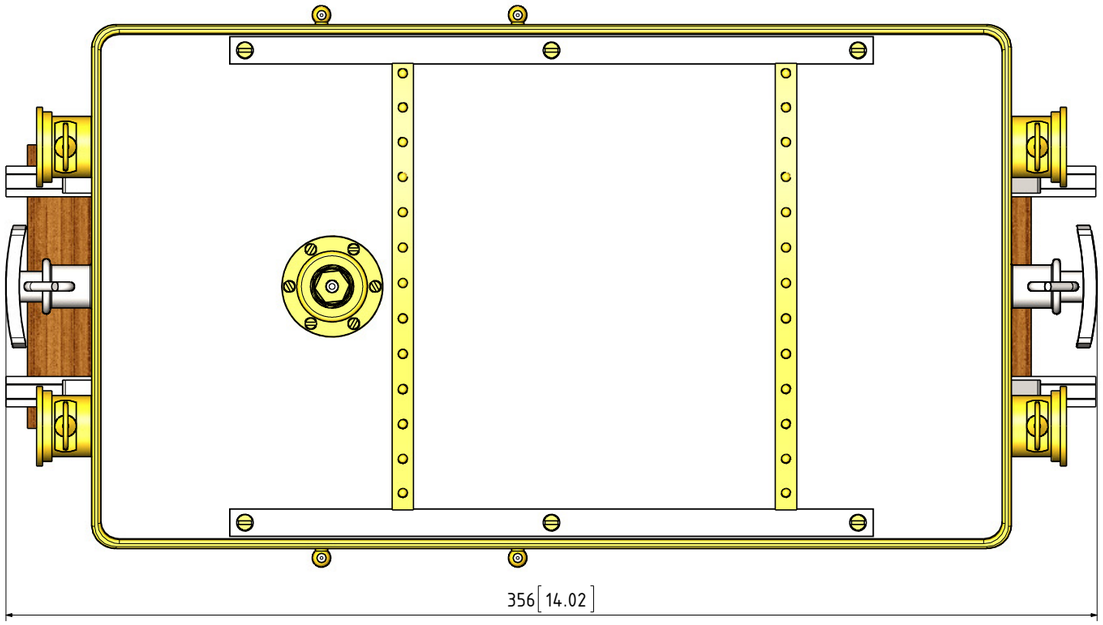


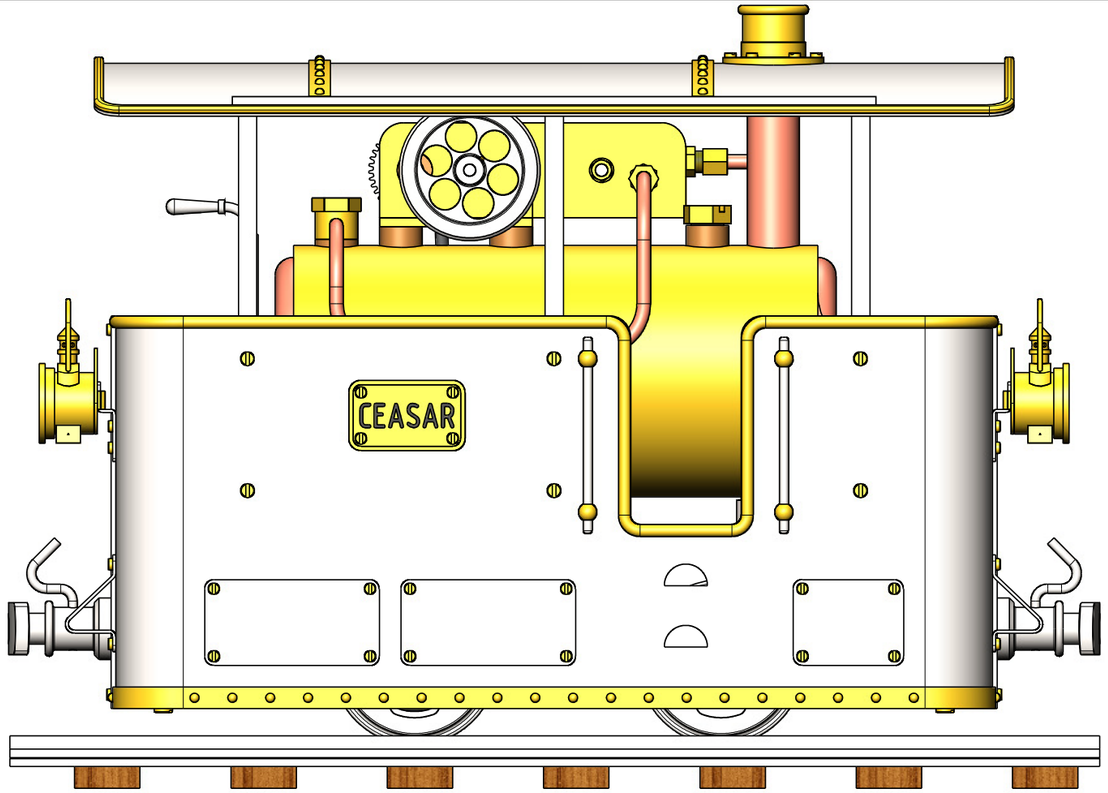


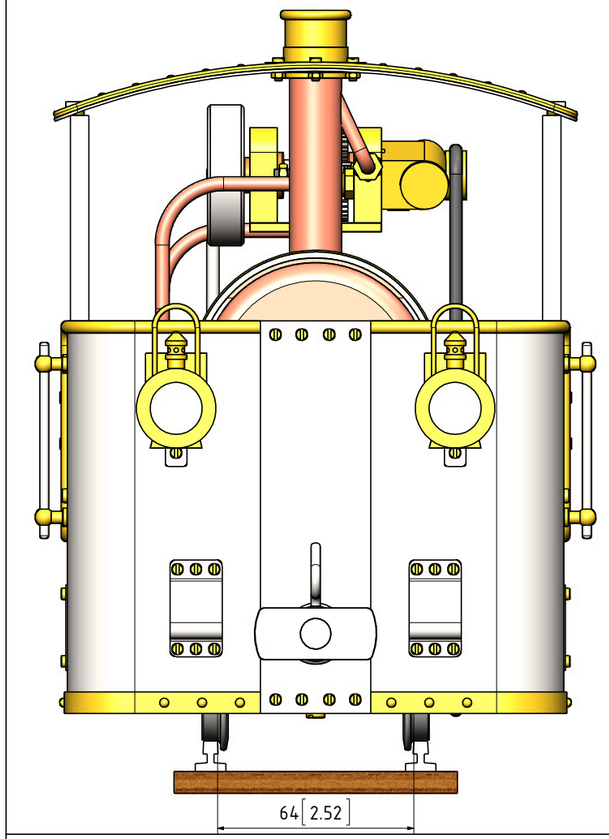


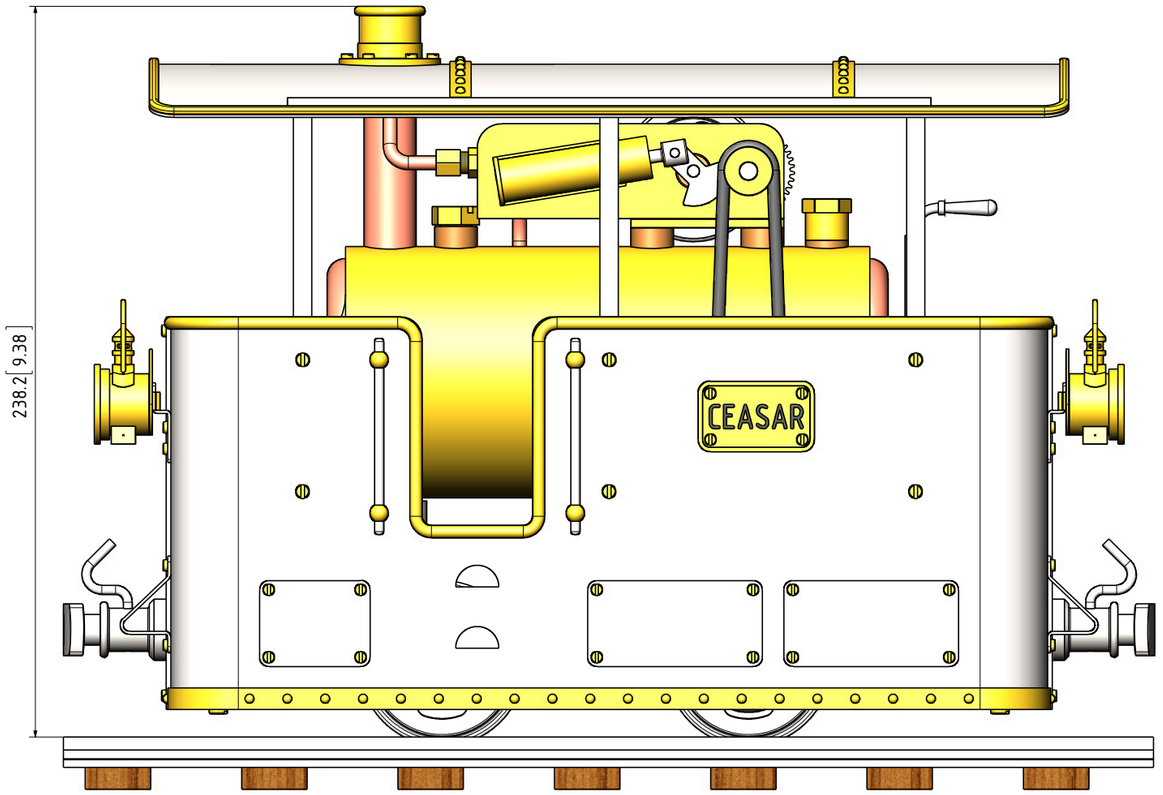


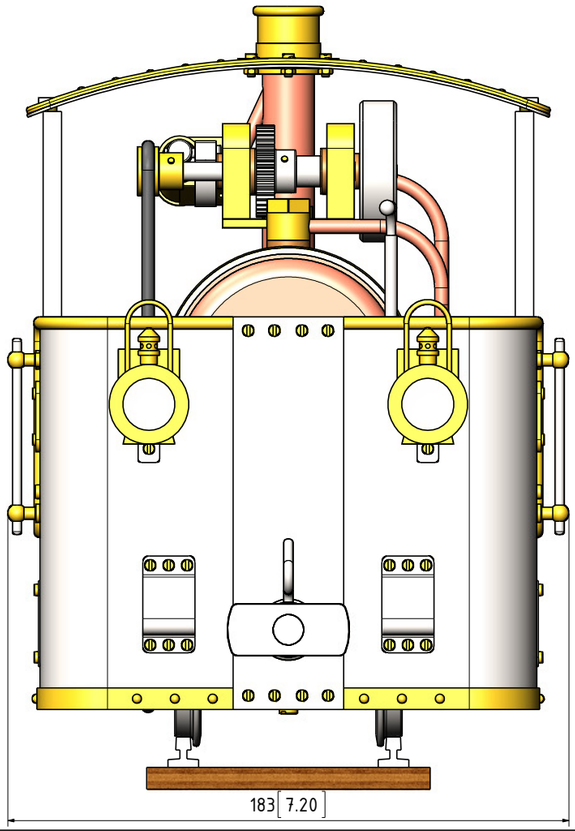


NOTES: LOOSELY BASED ON A MODEL WHICH WAS FOUND IN A MODEL ENGINEERING MAGAZINE

TITLE

# GAS FIRED MODEL OF A NARROW GAUGE TRAM LOCO CALLED "CEASAR". (64mm/2.5")

DRAWING CONTENTS

## GENERAL ARRANGEMENT

PROJECT No 07E-11-00

JDW DRAUGHTING SERVICES
J.A.M. DE WAAL. 12 BRIGHTWELL STREET PAPAKURA 2110.
NEW ZEALAND. PHONE: 0064 09 2988815. MOB: 0211791000
E-MAIL: dewaal@xtra.co.nz.

PROJECTION JDWDS

DATE OCTOBER-2016

SHEET: 01 OF 07

MODEL SCALE: 1:1

DWG SCALE: 1:1 @A3 OR AS SHOWN

Copyright © J.A.M. DE WAAL PAPAKURA NZ

A3 No: CEASAR-01

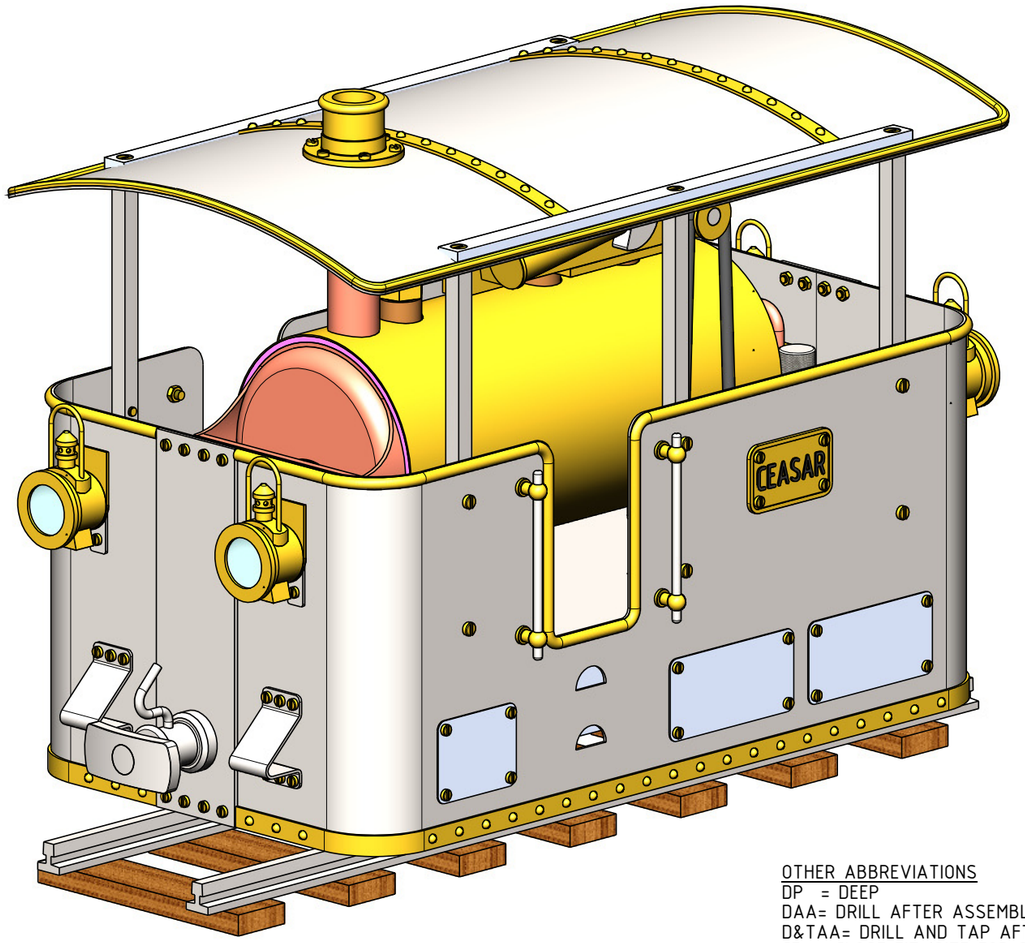


NOTES:
0. ALL DRAWINGS ARE IN METRIC MEASUREMENTS
1. ALL ENGINEERING PRACTICES SHALL BE APPLIED WITH REGARDS TO HOLE AND SHAFT TOLERANCES.
2. WHERE SCREWS OR BOLTS ARE USED THE CLEARANCE HOLES SHALL BE APPROXIMATELY 5% TO 8% LARGER THAN THE MATCHING TAPPED HOLE.
3. PREFERABLY ALL TAPPED HOLES AND MATCHING SCREWS AND/OR BOLTS TO BE METRIC FINE (MF)
4. MATERIALS SPECIFIED ON THE DRAWINGS ARE INDICATIVE ONLY. THE BUILDER CAN MAKE HIS/HER OWN MATERIAL CHOICE.
5. ALL CONNECTIONS/JOINTS WHICH HAVE STEAM PRESSURE APPLIED TO IT SHALL BE SILVER/HARD SOLDERED.
6. COMPRESSION SPRINGS ARE DRAWN IN COMPRESSED STATE (CP), UNCOMPRESSED STATE IS APPROX 40% TO 60% LONGER THEN COMPRESSED STATE.
7. WHERE PREFERRED SCREW OR RIVETED CONNECTIONS CAN BE OMITTED AND PARTS CAN BE BONDED TOGETHER BY USING EITHER HIGH STRENGTH GLUE, EPOXY RESIN, OR SOLDER.
8. PARTS WHICH ARE DIRECTLY EXPOSED TO STEAM AND/OR WATER SHOULD BE CONSTRUCTED USING NON-FERROUS OR NON CORROSIVE MATERIAL SUCH AS BRASS, BRONZE, GUNMETAL, STAINLESS STEEL, COPPER OR MONEL.
9. THE ORDER IN WHICH THE PARTS/COMPONENTS ARE MANUFACTURED AND THE MODEL IS ASSEMBLED IS ENTIRELY LEFT TO THE BUILDER/MODEL MAKER.
10. A COLOUR SCHEME FOR THIS PROJECT IS ENTIRELY LEFT UP TO THE MODEL MAKER.
11. THE MANNER IN WHICH THE PARTS/COMPONENTS ARE MANUFACTURED IS ENTIRELY LEFT UP TO THE BUILDER.
12. USE LOCTITE, ON SCREW OR PRESS FIT CONNECTIONS OR SURFACES, WERE DEEMED NECESSARY TO PREVENT PARTS FROM LOOSENING.
13. WASHERS SHALL BE USED WHERE DEEMED NECESSARY.
14. INQUIRE AT THE APPROPRIATE AUTHORITIES WHETHER OR NOT THIS BOILER REQUIRES A PRESSURE TEST CERTIFICATE
XX. ERRORS AND/OR OMISSIONS MAY OCCUR IN THE DRAWINGS, DO NOT HESITATE TO CONTACT ME SO THAT THE ERRORS/OMISSIONS CAN BE RECTIFIED.

OTHER ABBREVIATIONS
DP = DEEP
DAA= DRILL AFTER ASSEMBLY
D&TAA= DRILL AND TAP AFTER ASSEMBLY
CF = CLOSE FIT (SIZE FOR SIZE)
PF = PRESS FIT
PFAA= PRESS FIT AFTER ASSEMBLY
PCD = PITCH CIRCLE DIAMETER
RM = REAM
HEX = HEXACON, 6SIDED
CP = COMPRESSED
KNL = KNURLED
CSK = COUNTERSINK
PL = PLACES
DWL= DOWEL
T&B = TOP AND BOTTOM
(T)HESOP=(TAPPED)HOLES EQUALLY SPACED ON PCD
(T)HESOC=(TAPPED)HOLES EQUALLY SPACED ON CIRCUMFERENCE
SA-xxx= SUB ASSEMBLY-xxx

MATERIAL ABBREVIATIONS:
ALU = ALUMINIUM
BRS = BRASS
BRZ = BRONZE OR GUNMETAL (BRZ/GM)
CI = CAST IRON
CU = COPPER
GRA = GRAPHITE
MS = MILD STEEL/BRIGHT MILD STEEL
S/S = SILVER STEEL OR STAINLESS STEEL
SPS = SPRING STEEL
PEEK= POLYETHER ETHER KETONE
SYN = SYNTHETIC MATERIAL SUCH AS VETON, NYLON, TEFLON OR RUBBER
IN GENERAL SYNTHETIC MATERIALS SOULD BE ABLE TO WITHSTAND THE HEAT AND PRESSURE(S) APPLIED TO THEM.
nnn/nnn MEANS THAT EITHER MATERIAL CAN BE USED

| QTY. | PART NUMBER |
|---|---|
| 1 | CEASAR-6-01-WHEEL AXLE |
| 1 | CEASAR-6-01-WHEEL AXLE |
| 4 | CEASAR-6-02-WHEEL |
| 1 | CEASAR-6-03-CRANKSHAFT |
| 1 | CEASAR-6-04-CRANK WEB |
| 1 | CEASAR-6-05-CRANK PIN |
| 1 | CEASAR-6-06-FLYWHEEL |
| 1 | CEASAR-6-07-DRIVING GEAR WHEEL |
| 1 | CEASAR-6-08-DRIVEN GEAR WHEEL |
| 1 | CEASAR-6-09-DRIVEN GEAR WHEEL SHAFT |
| 1 | CEASAR-6-10-DRIVEN SHAFT SPACER |
| 1 | CEASAR-6-11-CYLINDER |
| 1 | CEASAR-6-12-CYLINDER LID |
| 1 | CEASAR-6-13-CYLINDER PORT BLOCK |
| 1 | CEASAR-6-14-CYLINDER ROCKING SHAFT |
| 1 | CEASAR-6-15-ROCKING SHAFT SPACER |
| 1 | CEASAR-6-16-ROCKING SHAFT SPRING |
| 1 | CEASAR-6-17-PISTON |
| 1 | CEASAR-6-18-DRIVING PULLEY |
| 1 | CEASAR-6-19-DRIVEN WHEEL PULLEY |
| 1 | CEASAR-6-20-DRIVING BELT |

| QTY. | PART NUMBER |
|---|---|
| 1 | CEASAR-7-01-CABIN SHELL |
| 2 | CEASAR-7-02- CABIN COVER PLATE |
| 2 | CEASAR-7-03-HOLE COVER TYPE-1 |
| 4 | CEASAR-7-04-HOLE COVER TYPE-2 |
| 6 | CEASAR-7-05-ROOF PILLAR |
| 3 | CEASAR-7-06-BUFFER HOUSING |
| 3 | CEASAR-7-07-BUFFER |
| 3 | CEASAR-7-08-M10 BUFFER NUT |
| 3 | CEASAR-7-09-PULL HOOK |
| 1 | CEASAR-7-10-ROOF |
| 1 | CEASAR-7-11-ROOF CHIMNEY RING |
| 1 | CEASAR-7-12-CHIMNEY CROWN |
| 1 | CEASAR-7-13-ROOF TRIM |
| 2 | CEASAR-7-14-ROOF STIFFENING STRIP |
| 2 | CEASAR-7-15-CABIN STIFFENING STRIP |
| 1 | CEASAR-7-16-CABIN TRIM |
| 1 | CEASAR-7-16-CABIN TRIM |
| 4 | CEASAR-7-17-LIFTING SUPPORT |
| 4 | CEASAR-7-18-LAMP BRACKET |
| 4 | CEASAR-7-19-HAND RAIL |
| 8 | CEASAR-7-20-HAND RAILSUPPORT |
| 4 | CEASAR-7-21-LANTARN BODY |
| 4 | CEASAR-7-22-LANTARN LENS COVER |
| 4 | CEASAR-7-23-LANTARN LENS |
| 4 | CEASAR-7-24-LANTRAN BACK PLATE |
| 4 | CEASAR-7-25-LANTRAN TOP BRACKET |
| 4 | CEASAR-7-26-LANTRAN REAR BRACKET |
| 4 | CEASAR-7-27-LANTRAN CARRY HANDLE |
| 4 | CEASAR-7-28-LANTRAN VENT |
| 4 | CEASAR-7-29-LANTRAN BASE |
| 2 | CEASAR-7-30-ROOF FASTENING STRIP |
| 2 | CEASAR-7-31-NAME PLATE |

| QTY. | PART NUMBER |
|---|---|
| 1 | CEASAR-64mm-RAIL |
| 86 | CEASAR-M2.5 NUT |
| 80 | CEASAR-M2.5x4 PAN HEAD SCREW |
| 6 | CEASAR-M2.5x6 PAN HEAD SCREW |
| 8 | CEASAR-M3 NUT |
| 6 | CEASAR-M3x7 C-SINK SCREW |
| 8 | CEASAR-M3x7 GRUB SREW |
| 14 | CEASAR-M3x8 PAN HEAD SCREW |
| 1 | CEASAR-M4 NUT |
| 4 | CEASAR-M4x10 PAN HEAD SCREW |
| 1 | CEASAR-M4x14 GRUB SREW |
| 1 | CEASAR-M5x8 GRUB SREW |
| 2 | CEASAR-M5x10 PAN HEAD SCREW |
| 2 | CEASAR-M5x16 PAN HEAD SCREW |
| 1 | CEASAR-M6 NUT |

| QTY. | PART NUMBER |
|---|---|
| 1 | CEASAR-1-01-MAIN UNDER FRAME |
| 4 | CEASAR-1-02-WHEEL AXLE BEARING |
| 2 | CEASAR-1-03-MAIN FRAME END BRACKET |
| 1 | CEASAR-1-04-FOOT PLATE |
| 1 | CEASAR-1-07-OILER CONTAINER |
| 1 | CEASAR-1-08-OILER CONTAINER TOP SCREW |
| 1 | CEASAR-1-09-OILER STEAM DISCHARGE PIPE |
| 1 | CEASAR-1-10-OILER STEAM INLET PIPE |

| QTY. | PART NUMBER |
|---|---|
| 1 | CEASAR-2-01-BOILER SHELL |
| 1 | CEASAR-2-02-BOILER COVER BURNER END |
| 1 | CEASAR-2-03-BOILER COVER CHIMNEY END |
| 1 | CEASAR-2-04-BOILER FLAME PIPE |
| 4 | CEASAR-2-05-BOILER STAND OFF |
| 2 | CEASAR-2-06-BOILER STAND OFF INSULATOR DISC |
| 2 | CEASAR-2-07-BOILER STAND OFF INSULATOR |
| 1 | CEASAR-2-08-14x11.5xM8 BOILER BUSH TYPE-1 |
| 2 | CEASAR-2-09-14x11.5xM8 BOILER BUSH TYPE-2 |
| 1 | CEASAR-2-10-BOILER END DEFLECTOR |
| 1 | CEASAR-2-11-WATER FILLER CAP |
| 2 | CEASAR-2-12-BURNER CLAMP |
| 2 | CEASAR-2-13-BOILER BURNER STAND OFF |
| 1 | CEASAR-2-14-SAFFETY VALVE BODY |
| 1 | CEASAR-2-15-SAFFETY VALVE BALL |
| 1 | CEASAR-2-16-SAFFETY VALVE STEM |
| 1 | CEASAR-2-17-SAFFETY VALVE TOP RING |
| 1 | CEASAR-2-18-SAFFETY VALVE SPRING |
| 1 | CEASAR-2-19-SAFFETY VALVE TOP SCREW NUT |
| 1 | CEASAR-2-20-STM T-OFF BANJO FITTING |
| 1 | CEASAR-2-21-STM T-OFF BANJO FITTING SCREW |
| 1 | CEASAR-2-22-BOILER THERMAL INSULATOR BLANKET |
| 1 | CEASAR-2-23-BOILER GLADDING |
| 1 | CEASAR-2-24-CHIMNEY |

| QTY. | PART NUMBER |
|---|---|
| 1 | CEASAR-3-01-GAS TANK SHELL |
| 2 | CEASAR-3-02-GAS TANK END CAP |
| 2 | CEASAR-3-03-14x11.5xM8 GAS TANK BUSH TYPE-1 |
| 1 | CEASAR-3-04-14x11.5xM8 GAS TANK BUSH TYPE-2 |
| 1 | CEASAR-3-05-GAS TANK SUPPLY VALVE HOUSING |
| 1 | CEASAR-3-06-GAS TANK SUPPLY VALVE SPINDLE |
| 1 | CEASAR-3-07-GAS TANK SUPPLY VALVE SPINDLE NUT |
| 1 | CEASAR-3-08-GAS TANK SUPPLY NIPPLE |
| 1 | CEASAR-3-09-GAS TANK AIR RELIEF VALVE HOUSING |
| 1 | CEASAR-3-10-GAS TANK AIR RELIEF VALVE SPINDLE |
| 1 | CEASAR-3-11-GAS TANK AIR RELIEF VALVE SPINDLE NUT |
| 1 | CEASAR-3-12-M8x4 PIPE NUT |
| 1 | CEASAR-3-13-GAS SUPPLY PIPE |
| 1 | CEASAR-3-14-GAS TANK FILLER VALVE HOUSING |
| 1 | CEASAR-3-15-GAS TANK FILLER VALVE |
| 1 | CEASAR-3-16-GAS TANK FILLER VALVE TOP |
| 1 | CEASAR-3-17-GAS TANK FILLER VALVE SPRING |

| QTY. | PART NUMBER |
|---|---|
| 1 | CEASAR-4-01-BURNER TUBE |
| 1 | CEASAR-4-02-BURNER FLAME PIPE COVER |
| 1 | CEASAR-4-03-BURNER GAS SPRAY NOZZLE |
| 1 | CEASAR-4-04-BURNER GAS SPRAY NOZZLE HOLDER |
| 1 | CEASAR-4-05-BURNER SUPPLY NIPPLE |
| 1 | CEASAR-4-06-BURNER TUBE COVER PLATE |
| 1 | CEASAR-4-07-M8x4 PIPE NUT |

| QTY. | PART NUMBER |
|---|---|
| 1 | CEASAR-5-01-GEARBOX BASE PLATE |
| 1 | CEASAR-5-02-GEARBOX SIDE FRAME-PORT BLOCK |
| 1 | CEASAR-5-03-GEARBOX SIDE FRAME |
| 2 | CEASAR-5-04-CRANKSHAFT BEARING BUSH |
| 2 | CEASAR-5-05-GEARBOX BEARING BUSH |
| 2 | CEASAR-5-06-CONNECTOR NIPPLE |
| 2 | CEASAR-5-07-PIPE NUT |
| 1 | CEASAR-5-08-EXHAUST PIPE |

NOTE ON DRIVE SYSTEM: IF SO DESIRED THE 2 DRIVE PULLEYS (6-18 & 6-19) CAN BE REPLACED BY CHAIN SPROKECTS AND THE DRIVE BELT (6-20) SHOULD BECOME A CHAIN.

NOTES: LOOSELY BASED ON A MODEL WHICH WAS FOUND IN A MODEL ENGINEERING MAGAZINE

TITLE
# GAS FIRED MODEL OF A NARROW GAUGE TRAM LOCO CALLED "CEASAR". (64mm/2.5")

DRAWING CONTENTS
## ISOMETRIC VIEW, BILL OF MATERIALS AND NOTES

PROJECT No 07E-11-00
JDW DRAUGHTING SERVICES
J.A.M. DE WAAL. 12 BRIGHTWELL STREET PAPAKURA 2110 NEW ZEALAND. PHONE: 0064 09 2988815. MOB: 0211791000
E-MAIL: dewaal@xtra.co.nz.

PROJECTION JDWDS
DATE OCTOBER-2016
SHEET: 02 OF 07

MODEL SCALE: 1:1
DWG SCALE: 1:1 @A3 OR AS SHOWN
Copyright © J.A.M. DE WAAL PAPAKURA NZ
A3 No: CEASAR-02

NOTES: LOOSELY BASED ON A MODEL WHICH WAS FOUND IN A MODEL ENGINEERING MAGAZINE

TITLE
# GAS FIRED MODEL OF A NARROW GAUGE TRAM LOCO CALLED "CEASAR". (64mm/2.5")

DRAWING CONTENTS
## PARTS AND ASSEMBLIES


PROJECT No 07E-11-00

JDW DRAUGHTING SERVICES

J.A.M. DE WAAL. 12 BRIGHTWELL STREET PAPAKURA 2110. NEW ZEALAND. PHONE: 0064 09 2988815. MOB: 0211791000
E-MAIL: dewaal@xtra.co.nz.


PROJECTION JDWDS

DATE OCTOBER-2016


Copyright © J.A.M. DE WAAL PAPAKURA NZ


MODEL SCALE: 1:1

DWG SCALE: 1:1 @A3 OR AS SHOWN

SHEET: 03 OF 07 | A3 | No: CEASAR-03

NOTES: LOOSELY BASED ON A MODEL WHICH WAS FOUND IN A MODEL ENGINEERING MAGAZINE

TITLE
# GAS FIRED MODEL OF A NARROW GAUGE TRAM LOCO CALLED "CEASAR". (64mm/2.5")

DRAWING CONTENTS
## PARTS AND ASSEMBLIES

PROJECT No 07E-11-00

JDW DRAUGHTING SERVICES
J.A.M. DE WAAL. 12 BRIGHTWELL STREET PAPAKURA 2110. NEW ZEALAND. PHONE: 0064 09 2988815. MOB: 0211791000
E-MAIL: dewaal@xtra.co.nz.

PROJECTION | JDWDS

DATE OCTOBER-2016

SHEET: 04 OF 07 | A3

MODEL SCALE: 1:1

DWG SCALE: 1:1 @A3 OR AS SHOWN

Copyright © J.A.M. DE WAAL PAPAKURA NZ

No: CEASAR-04

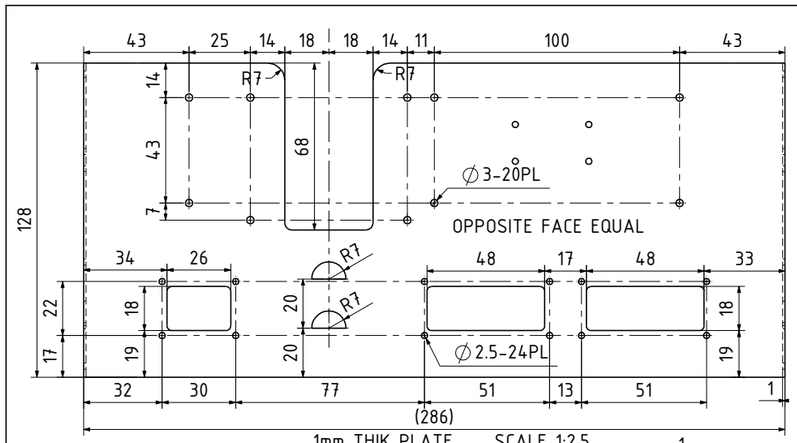


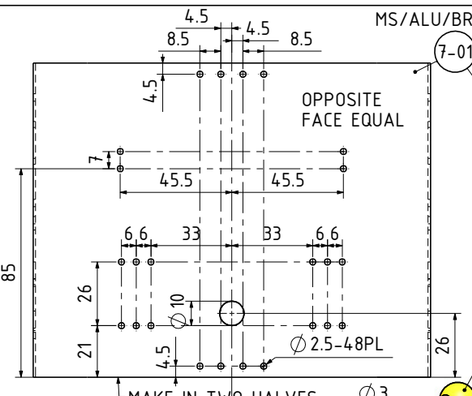


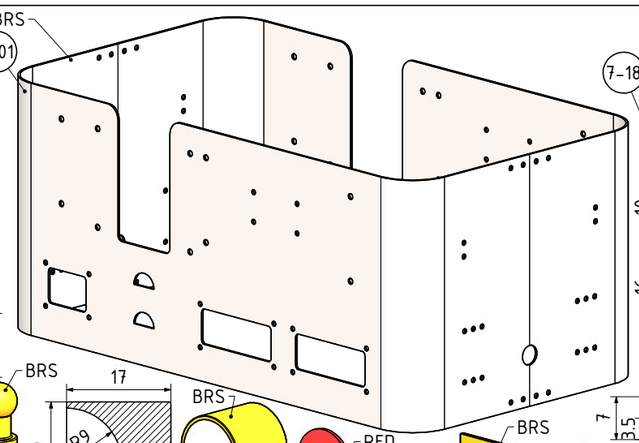


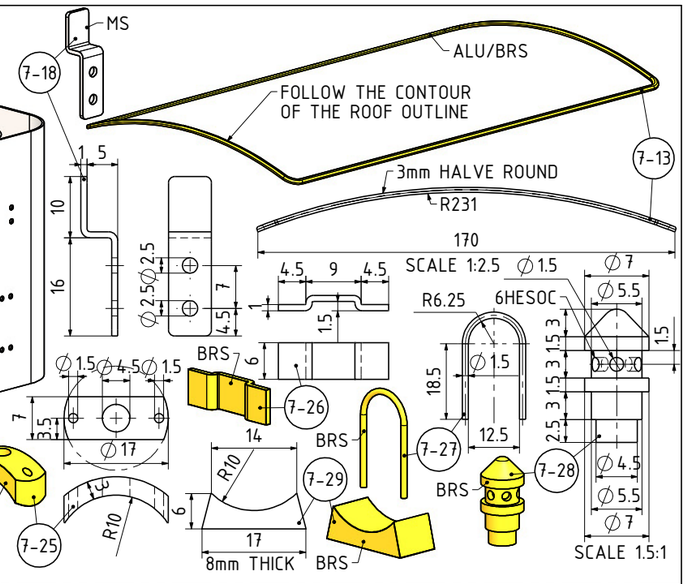


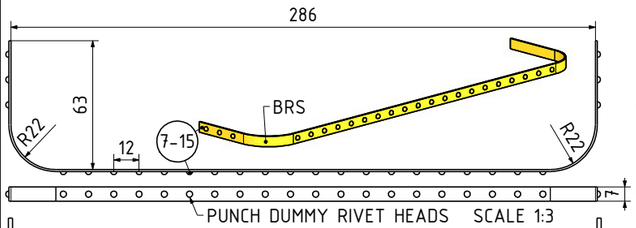


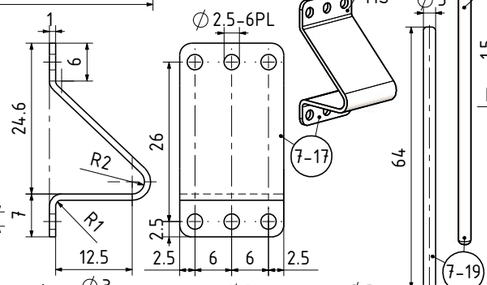


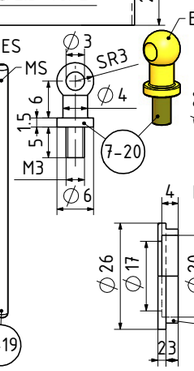


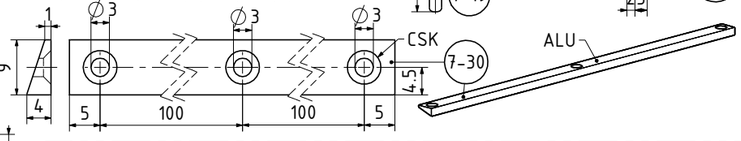


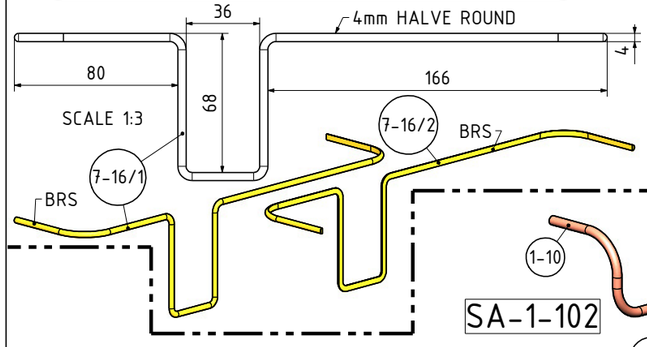


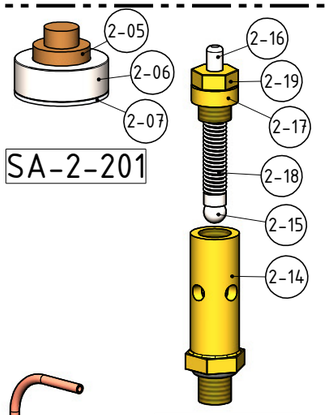


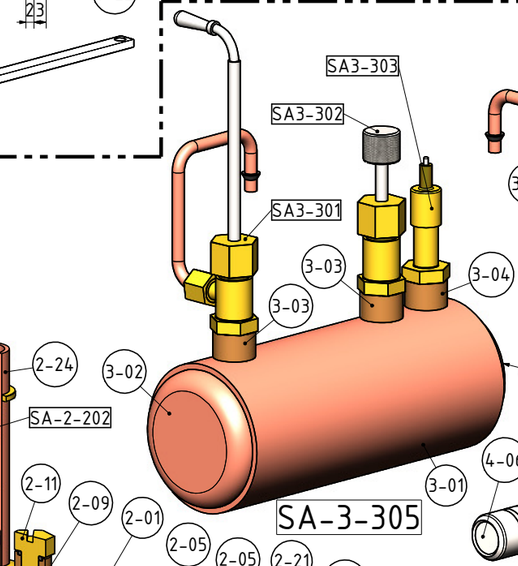


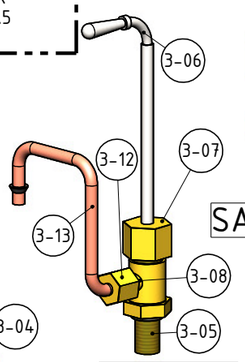


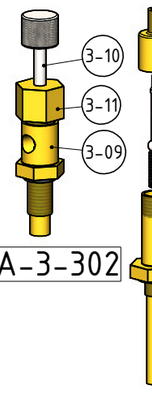


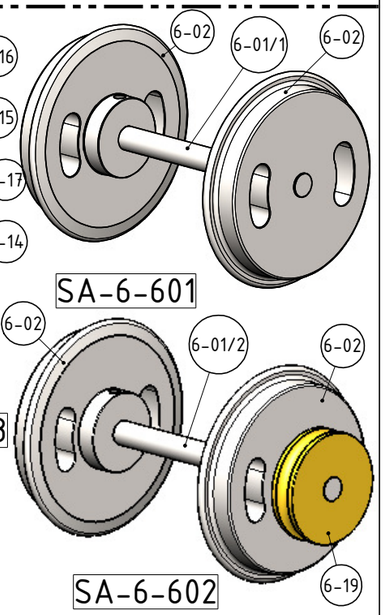


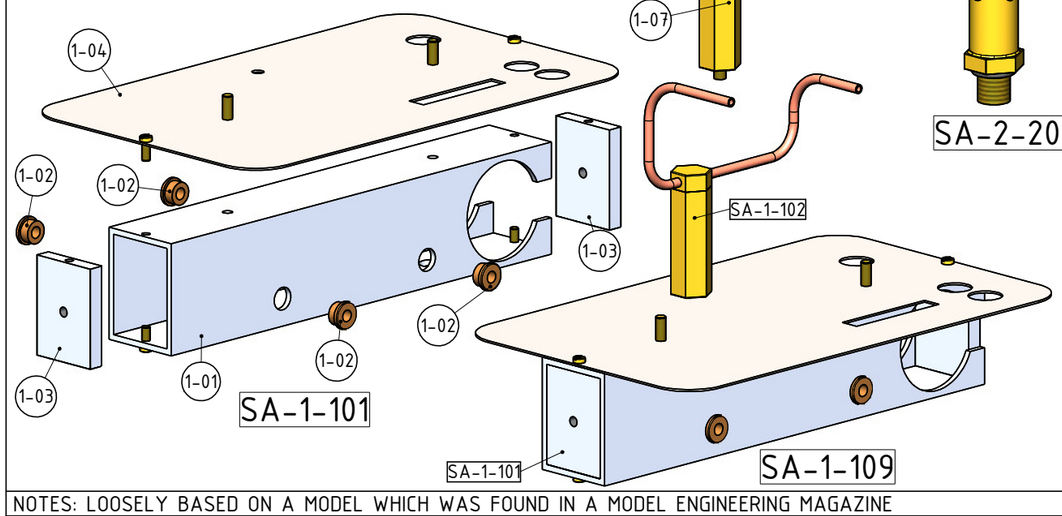





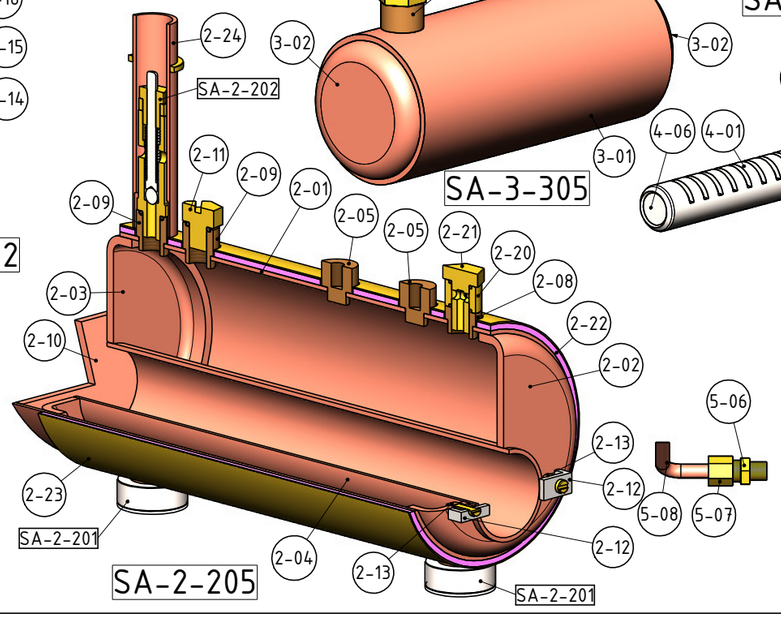


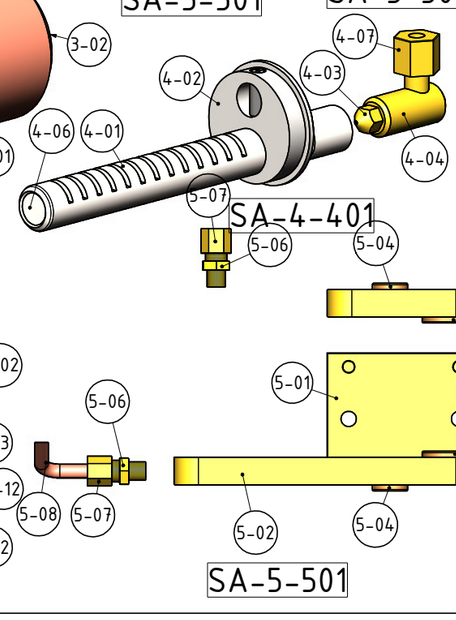


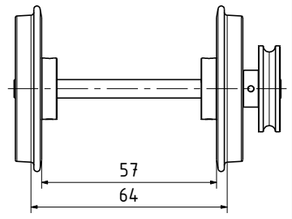


NOTES: LOOSELY BASED ON A MODEL WHICH WAS FOUND IN A MODEL ENGINEERING MAGAZINE

TITLE
# GAS FIRED MODEL OF A NARROW GAUGE TRAM LOCO CALLED "CEASAR". (64mm/2.5")

DRAWING CONTENTS
## PARTS AND ASSEMBLIES

PROJECT No 07E-11-00
JDW DRAUGHTING SERVICES
J.A.M. DE WAAL. 12 BRIGHTWELL STREET PAPAKURA 2110. NEW ZEALAND. PHONE: 0064 09 2988815. MOB: 0211791000
E-MAIL: dewaal@xtra.co.nz.

PROJECTION JDWDS
DATE OCTOBER-2016
SHEET: 05 OF 07

MODEL SCALE: 1:1
DWG SCALE: 1:1 @A3 OR AS SHOWN
Copyright © J.A.M. DE WAAL PAPAKURA NZ
A3 No: CEASAR-05

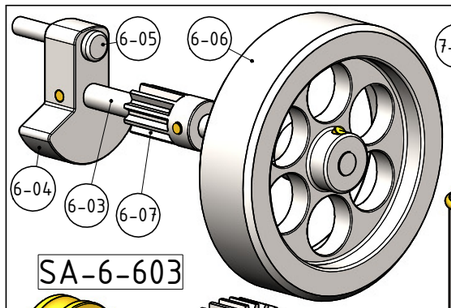


SA-6-603

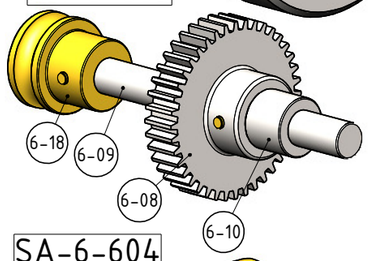


SA-6-604

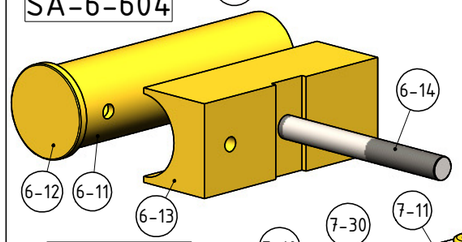


SA-6-605

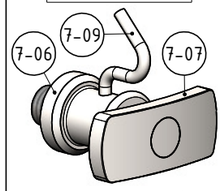


SA-7-702

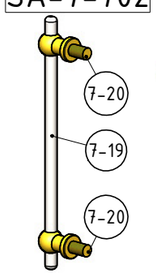


SA-7-704

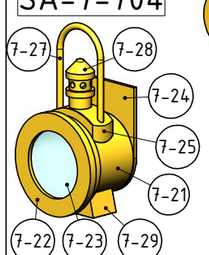


SA-7-705

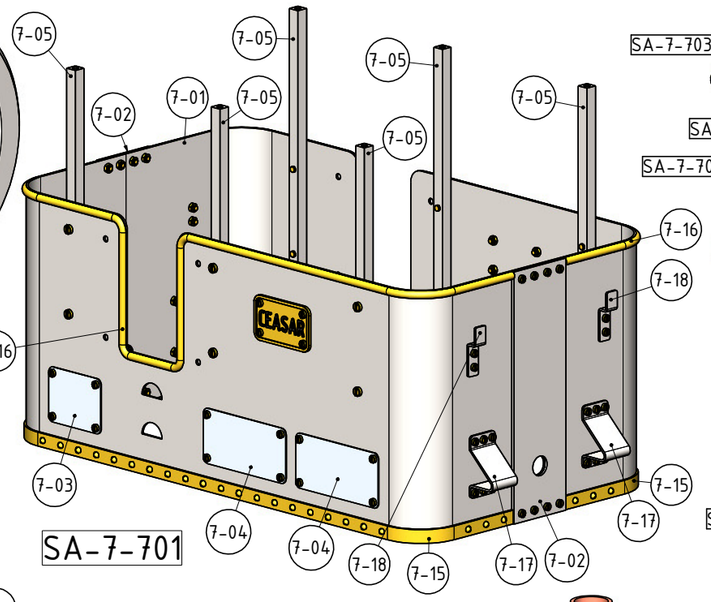


SA-7-701

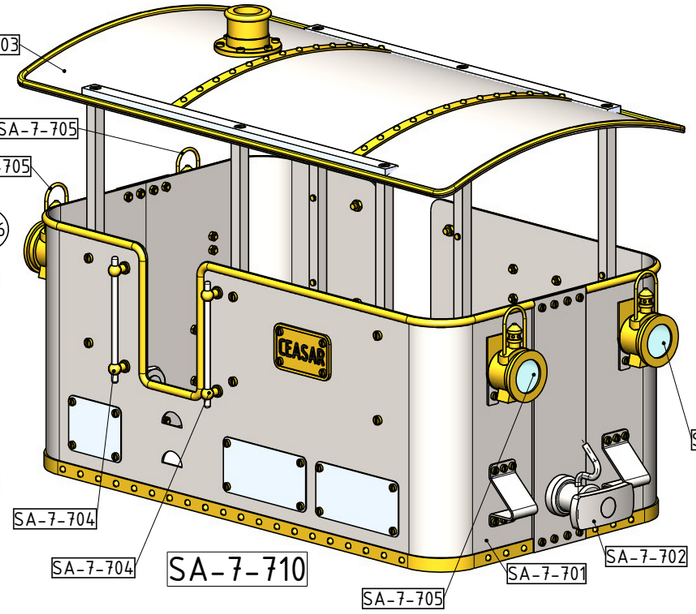


SA-7-710

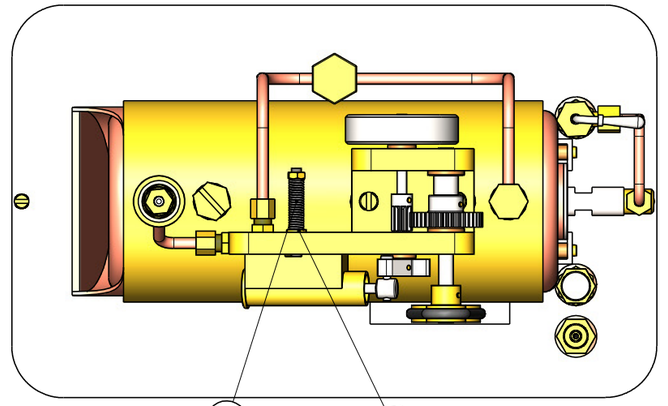


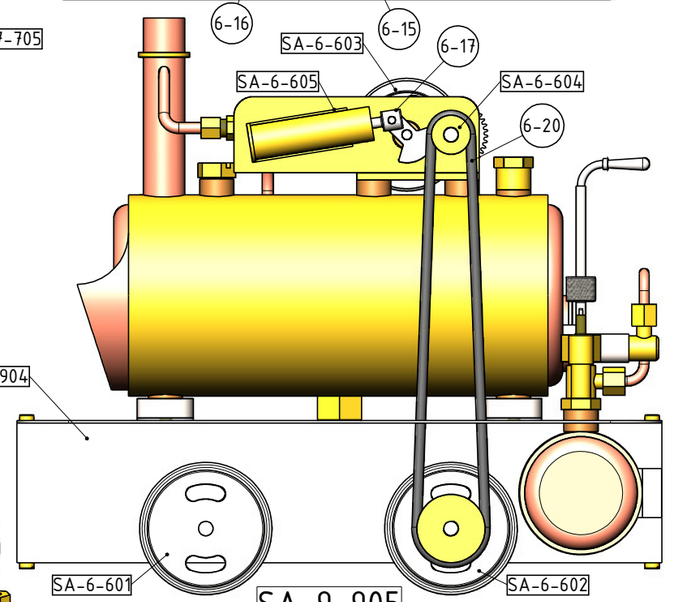


SA-9-905

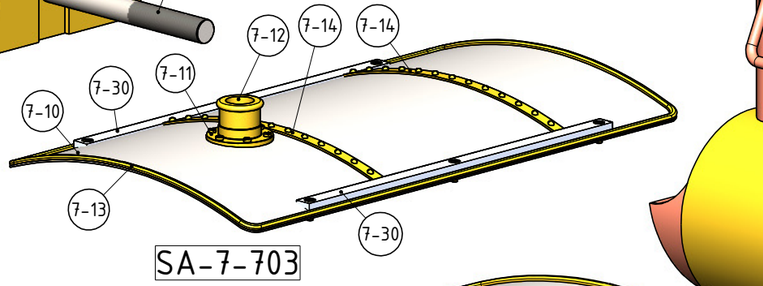


SA-7-703

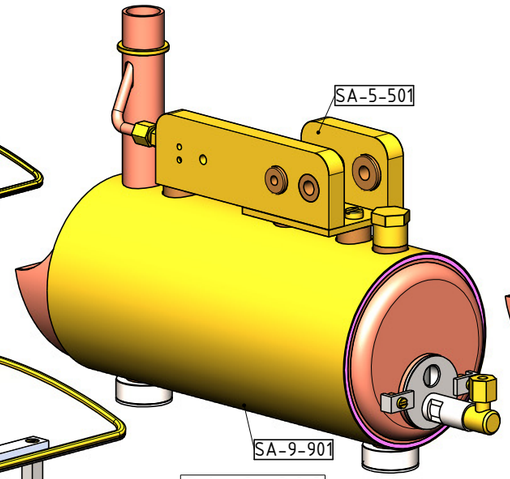


SA-9-902

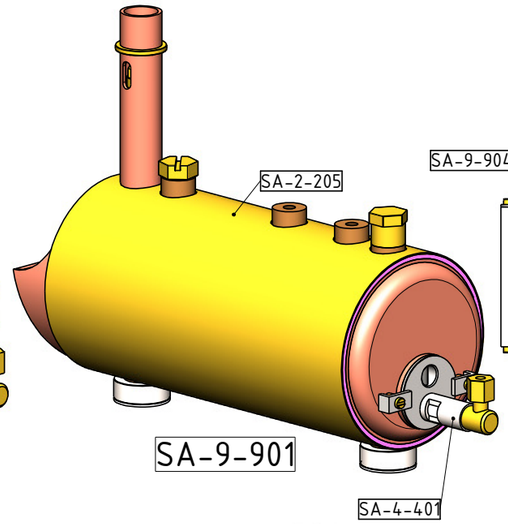


SA-9-901

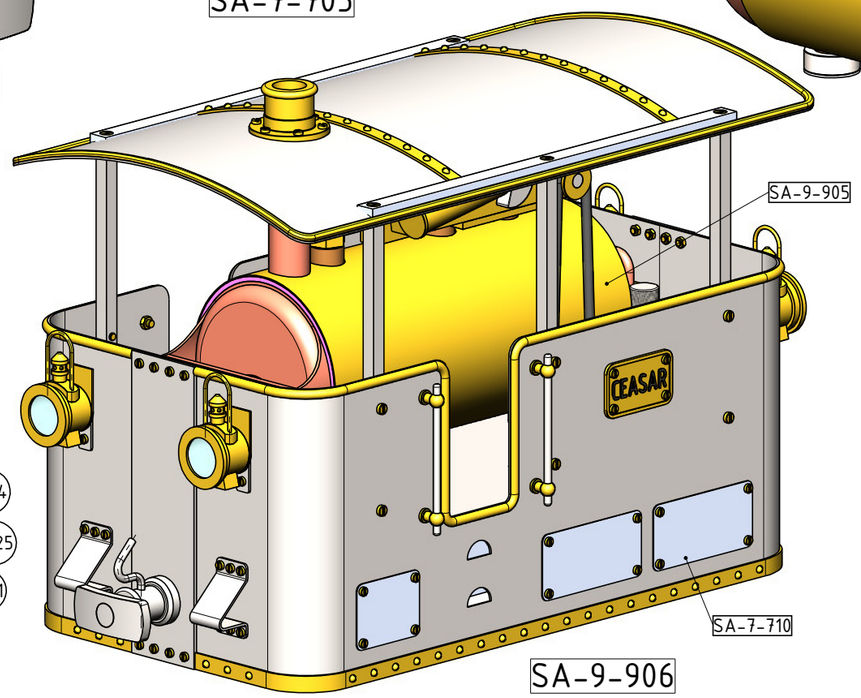


SA-9-906

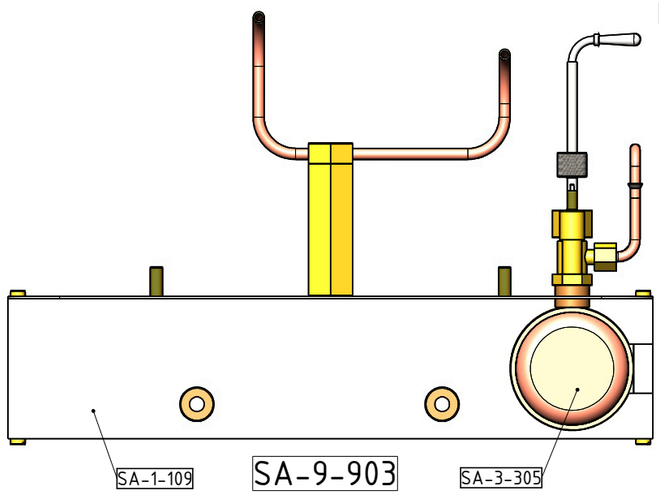


SA-9-903

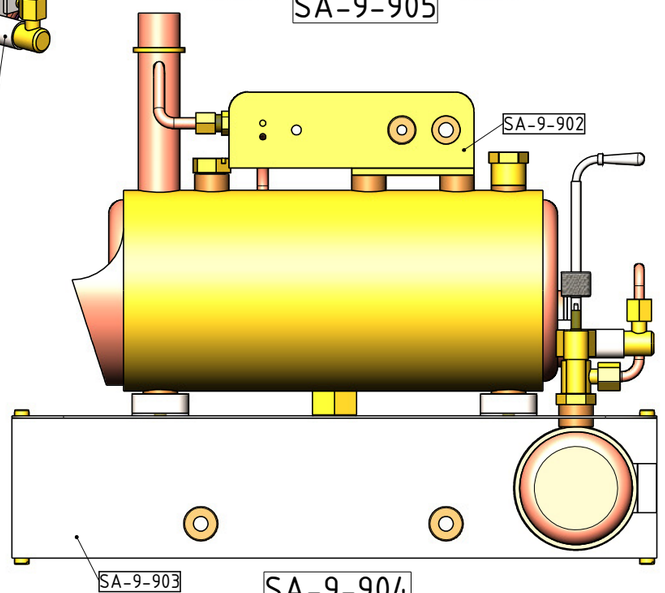


SA-9-904

NOTES: LOOSELY BASED ON A MODEL WHICH WAS FOUND IN A MODEL ENGINEERING MAGAZINE

TITLE

# GAS FIRED MODEL OF A NARROW GAUGE TRAM LOCO CALLED "CEASAR". (64mm/2.5")

DRAWING CONTENTS

## PARTS AND ASSEMBLIES

PROJECT No 07E-11-00

JDW DRAUGHTING SERVICES
J.A.M. DE WAAL. 12 BRIGHTWELL STREET PAPAKURA 2110. NEW ZEALAND. PHONE: 0064 09 2988815. MOB: 0211791000
E-MAIL: dewaal@xtra.co.nz.

PROJECTION JDWDS

DATE OCTOBER-2016

SHEET: 06 OF 07

MODEL SCALE: 1:1

DWG SCALE: 1:1 @A3 OR AS SHOWN

Copyright © J.A.M. DE WAAL PAPAKURA NZ

A3 | No: CEASAR-06




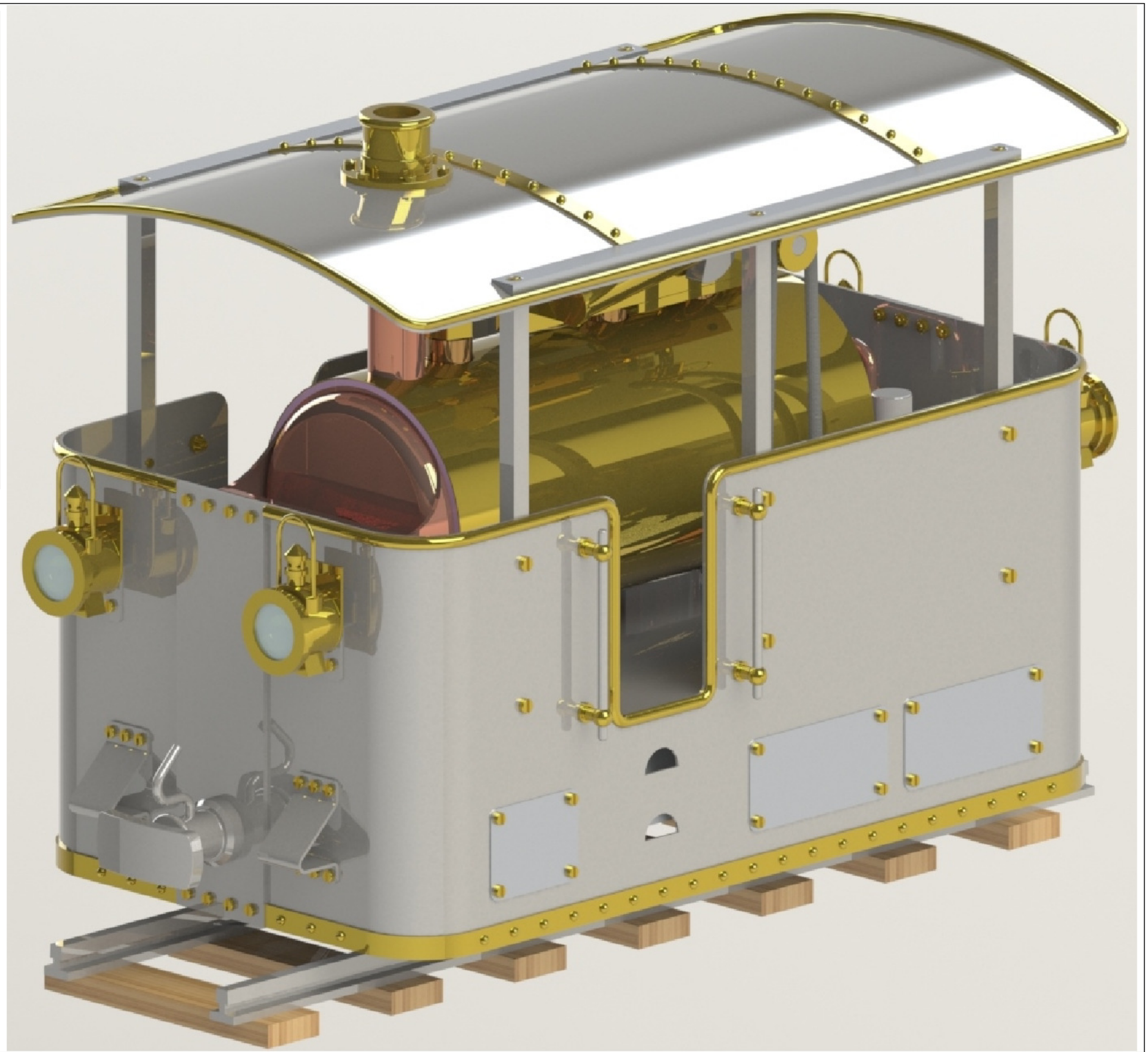

NOTES: LOOSELY BASED ON A MODEL WHICH WAS FOUND IN A MODEL ENGINEERING MAGAZINE

TITLE
# GAS FIRED MODEL OF A NARROW GAUGE TRAM LOCO CALLED "CEASAR". (64mm/2.5")

DRAWING CONTENTS
## RENDERED PICTURE

PROJECT No 07E-11-00

JDW DRAUGHTING SERVICES
J.A.M. DE WAAL. 12 BRIGHTWELL STREET PAPAKURA 2110. NEW ZEALAND. PHONE: 0064 09 2988815. MOB: 0211791000
E-MAIL: dewaal@xtra.co.nz.

PROJECTION JDWDS

DATE OCTOBER-2016

SHEET: 07 OF 07

MODEL SCALE: 1:1

DWG SCALE: 1:1 @A3 OR AS SHOWN

Copyright © J.A.M. DE WAAL PAPAKURA NZ

A3 | No: CEASAR-07