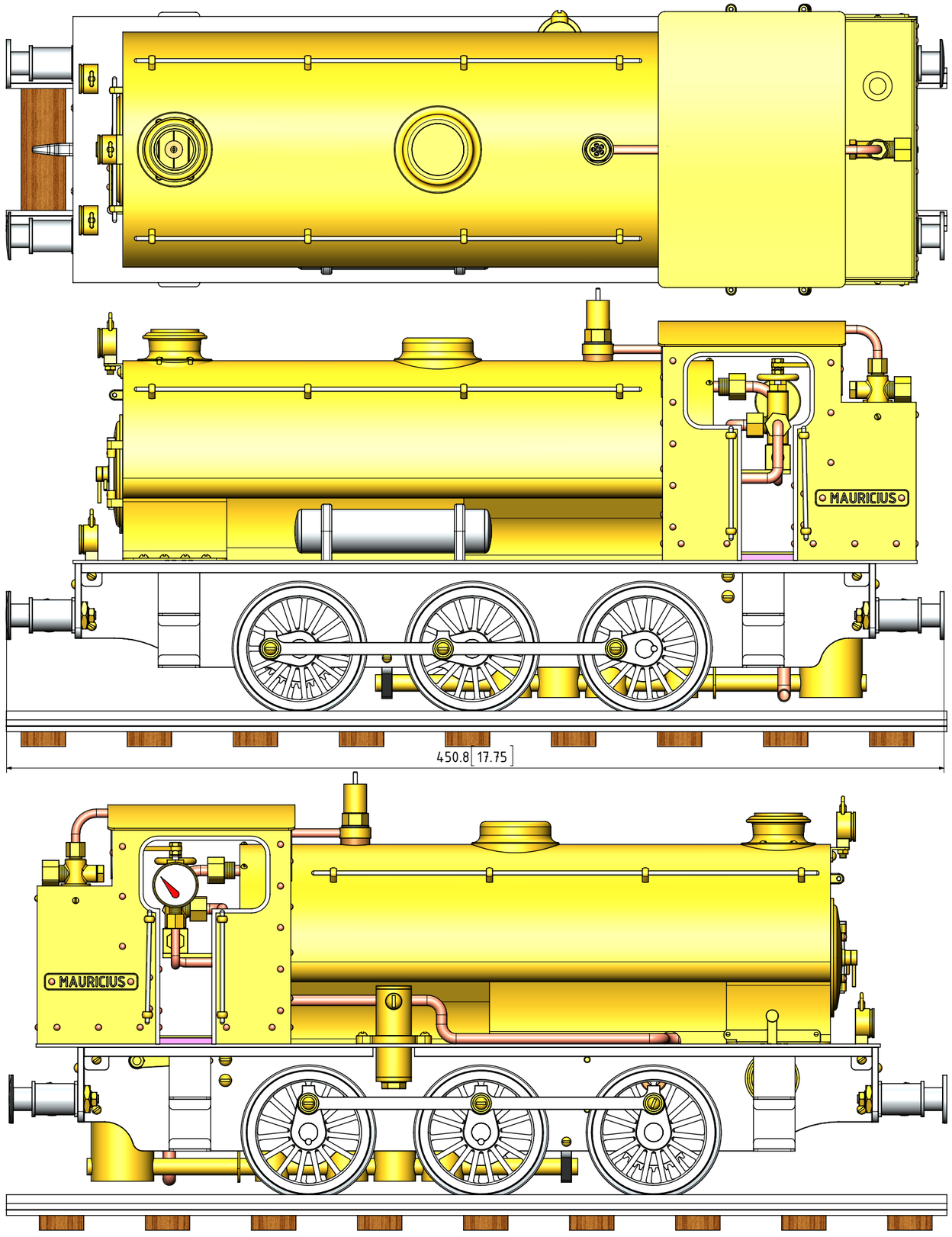

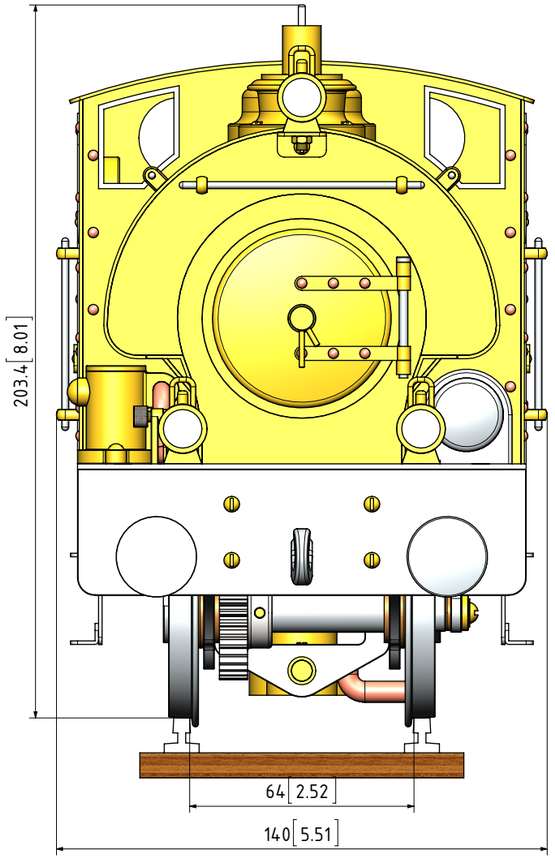

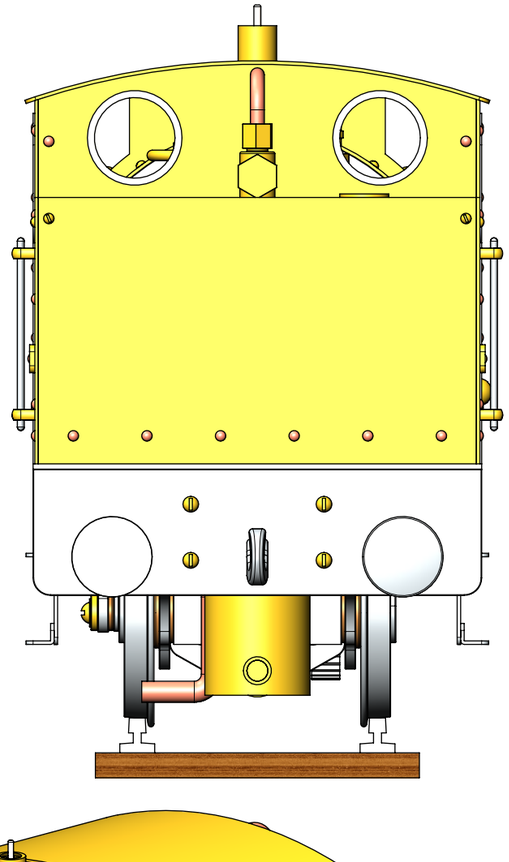

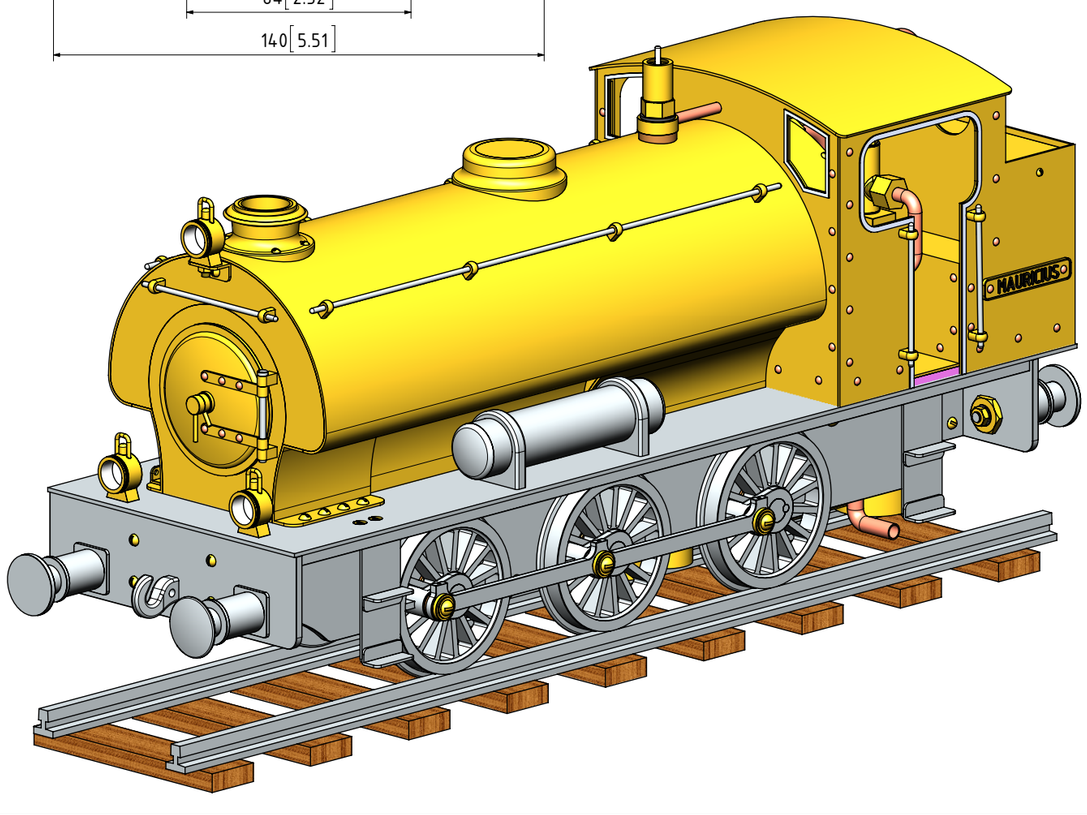

NOTES: THIS LOCO IS LOOSELY BASED ON DRAWINGS/SKETCHES/PICTURES FOUND ON THE INTERET AND AN OLD MODEL ENGINEERING MAGAZINE.

TITLE

A SPIRIT FIRED SIMPLE 0-6-0 SADDLE TANK STEAM LOCOMOTIVE GAUGE-3 (2.5"-64mm)

DRAWING CONTENTS

GENERAL ARRANGEMENT AND ISOMETRIC VIEW

PROJECT No 07B-14-00

JDW DRAUGHTING SERVICES

J.A.M. DE WAAL. 12 BRIGHTWELL STREET PAPAKURA 2110. NEW ZEALAND. PHONE: 0064 09 2988815. MOB: 0211791000 E-MAIL: dewaal@xtra.co.nz.

PROJECTION JDWDS

DATE AUGUST-2017

SHEET: 01 OF 08

MODEL SCALE: 1:1

DWG SCALE: 1:1 @A3 OR AS SHOWN

Copyright © J.A.M. DE WAAL PAPAKURA NZ

A3 No: MAURICIUS-01

NOTES:
0. ALL DRAWINGS ARE IN METRIC MEASUREMENTS
1. ALL ENGINEERING PRACTICES SHALL BE APPLIED WITH REGARDS TO HOLE AND SHAFT TOLERANCES.
2. WHERE SCREWS OR BOLTS ARE USED THE CLEARANCE HOLES SHALL BE APPROXIMATELY 5% TO 8% LARGER THAN THE MATCHING TAPPED HOLE.
3. PREFERABLY ALL TAPPED HOLES AND MATCHING SCREWS AND/OR BOLTS TO BE METRIC FINE (MF)
4. MATERIALS SPECIFIED ON THE DRAWINGS ARE INDICATIVE ONLY. THE BUILDER CAN MAKE HIS/HER OWN MATERIAL CHOICE.
5. ALL CONNECTIONS/JOINTS WHICH HAVE STEAM PRESSURE APPLIED TO IT SHALL BE SILVER/HARD SOLDERED.
6. COMPRESSION SPRINGS ARE DRAWN IN COMPRESSED STATE (CP), UNCOMPRESSED STATE IS APPROX 40% TO 60% LONGER THEN COMPRESSED STATE.
7. WHERE PREFERRED SCREW OR RIVETED CONNECTIONS CAN BE OMITTED AND PARTS CAN BE BONDED TOGETHER BY USING EITHER HIGH STRENGTH GLUE, EPOXY RESIN, OR SOLDER.
8. PARTS WHICH ARE DIRECTLY EXPOSED TO STEAM AND/OR WATER SHOULD BE CONSTRUCTED USING NON-FERROUS OR NON CORROSIVE MATERIAL SUCH AS BRASS, BRONZE, GUNMETAL, STAINLESS STEEL, COPPER OR MONEL.
9. THE ORDER IN WHICH THE PARTS/COMPONENTS ARE MANUFACTURED AND THE MODEL IS ASSEMBLED IS ENTIRELY LEFT TO THE BUILDER/MODEL MAKER.
10. A COLOUR SCHEME FOR THIS PROJECT IS ENTIRELY LEFT UP TO THE MODEL MAKER.
11. THE MANNER IN WHICH THE PARTS/COMPONENTS ARE MANUFACTURED IS ENTIRELY LEFT UP TO THE BUILDER.
12. USE LOCTITE, ON SCREW OR PRESS FIT CONNECTIONS OR SURFACES, WERE DEEMED NECESSARY TO PREVENT PARTS FROM LOOSENING.
13. WASHER SHALL BE USED WHERE DEEMED NECESSARY.
14. IN QUIRE AT THE APPROPRIATE AUTHORITIES WHETHER OR NOT THIS BOILER REQUIRES A PRESSURE TEST CERTIFICATE
XX. ERRORS AND/OR OMISSIONS MAY OCCUR IN THE DRAWINGS, DO NOT HESITATE TO CONTACT ME SO THAT THE ERRORS/OMISSIONS CAN BE RECTIFIED.

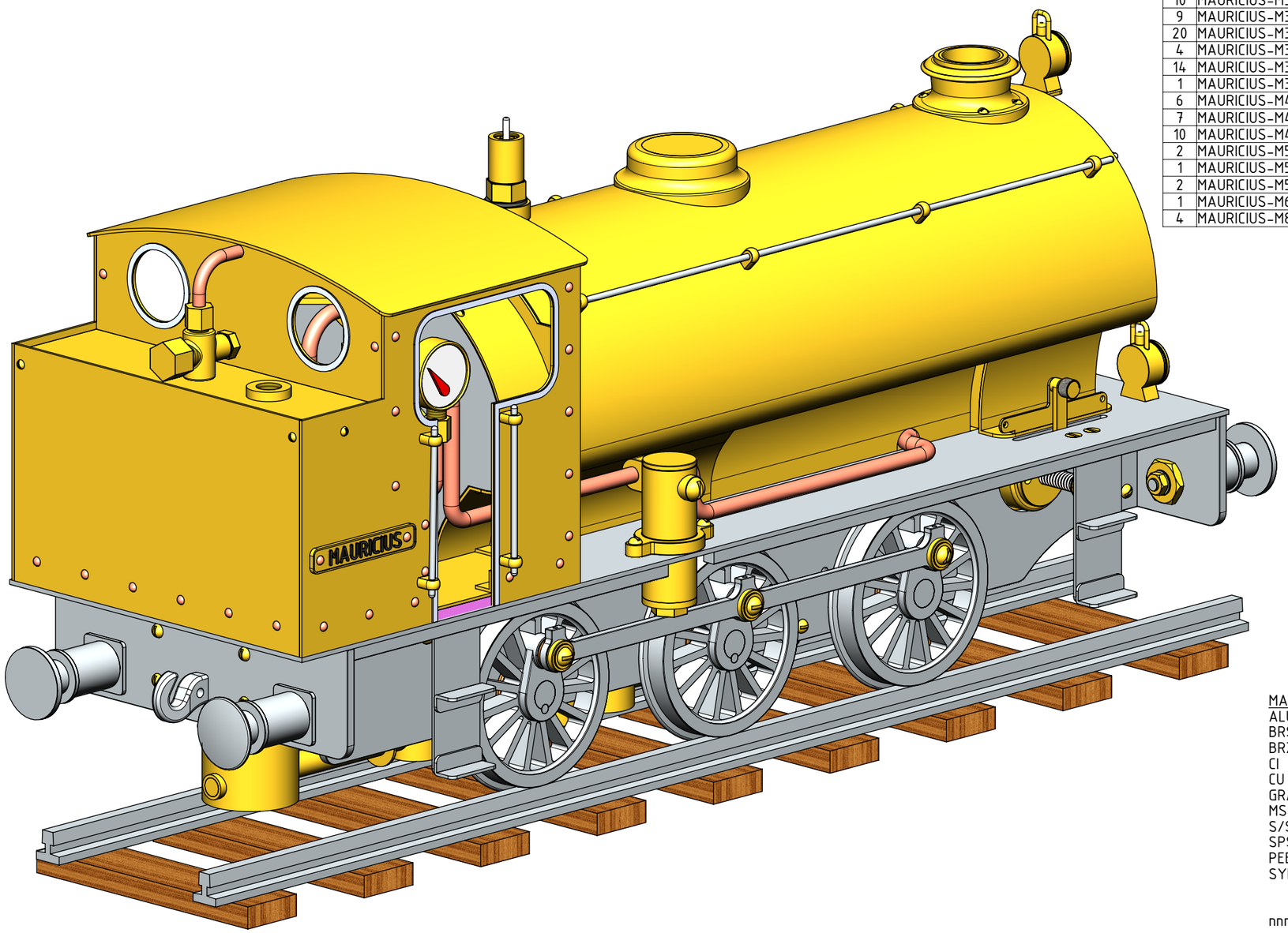

QTY.	PART NUMBER
1	MAURICIUS-5-01-FLOOR INSULATION LINING
1	MAURICIUS-5-02-CABIN FLOOR PLATE
1	MAURICIUS-5-03-CABIN FRONT PLATE
1	MAURICIUS-5-04-CABIN REAR PLATE
1	MAURICIUS-5-05-CABIN SIDE PLATE
1	MAURICIUS-5-05-CABIN SIDE PLATE
1	MAURICIUS-5-06-LIQUID CONTAINER REAR PLATE
1	MAURICIUS-5-07-LIQUID CONTAINER TOP PLATE
1	MAURICIUS-5-08-CABIN ROOF
8	MAURICIUS-5-09-CABIN HAND RAIL SUPPORT
4	MAURICIUS-5-10-CABIN HAND RAIL
2	MAURICIUS-5-11-NAME PLATE

QTY.	PART NUMBER
1	MAURICIUS--64mm-RAIL
2	MAURICIUS-M2.5x6 ROUND HEAD SCREW
64	MAURICIUS-M2x2-ROUND HEAD RIVET
17	MAURICIUS-M2x4 ROUND HEAD SCREW
46	MAURICIUS-M3 NUT
1	MAURICIUS-M3x4 GRUB SREW
10	MAURICIUS-M3x5 C-SINK SCREW
9	MAURICIUS-M3x6 ROUND HEAD SCREW
20	MAURICIUS-M3x8 ROUND HEAD SCREW
4	MAURICIUS-M3x10 C-SINK SCREW
14	MAURICIUS-M3x10 ROUND HEAD SCREW
1	MAURICIUS-M3x11 GRUB SREW
6	MAURICIUS-M4 NUT
7	MAURICIUS-M4 WASHER
10	MAURICIUS-M4x8 ROUND HEAD SCREW
2	MAURICIUS-M5 NUT
1	MAURICIUS-M5x6 ROUND HEAD SCREW
2	MAURICIUS-M5x22 ROUND HEAD SCREW
1	MAURICIUS-M6x4 PLUG SREW
4	MAURICIUS-M8 NUT SPECIAL

OTHER ABBREVIATIONS
DP = DEEP
DAA= DRILL AFTER ASSEMBLY
D&TAA= DRILL AND TAP AFTER ASSEMBLY
CF = CLOSE FIT (SIZE FOR SIZE)
PF = PRESS FIT
PFAA= PRESS FIT AFTER ASSEMBLY
PCD = PITCH CIRCLE DIAMETER
RM = REAM
HEX = HEXACON, 6SIDED
CP = COMPRESSED
KNL = KNURLED
CSK = COUNTERSINK
PL = PLACES
DWL= DOWEL
(T)HESOP=(TAPPED)HOLES EQUALLY SPACED ON PCD
(T)HESOC=(TAPPED)HOLES EQUALLY SPACED ON CIRCUMFERENCE
SA-xxx = SUB ASSEMBLY-xxx

MATERIAL ABBREVIATIONS:
ALU = ALUMINIUM
BRS = BRASS
BRZ = BRONZE OR GUNMETAL (BRZ/GM)
CI = CAST IRON
CU = COPPER
GRA = GRAPHITE
MS = MILD STEEL/BRIGHT MILD STEEL
S/S = SILVER STEEL OR STAINLESS STEEL
SPS = SPRING STEEL
PEEK= POLYETHER ETHER KETONE
SYN = SYNTHETIC MATERIAL SUCH AS VETON, NYLON, TEFLON OR RUBBER
IN GENERAL SYNTHETIC MATERIALS SOULD BE ABLE TO WITHSTAND THE HEAT AND PRESSURE(S) APPLIED TO THEM.
nnn/nnn MEANS THAT EITHER MATERIAL CAN BE USED

QTY.	PART NUMBER
1	MAURICIUS-1-01-SIDE FRAME
1	MAURICIUS-1-01-SIDE FRAME
1	MAURICIUS-1-02-FRONT BUFFER BEAM
1	MAURICIUS-1-03-REAR BUFFER BEAM
2	MAURICIUS-1-04-BUFFER TYPE-1
2	MAURICIUS-1-05-BUFFER TYPE-2
2	MAURICIUS-1-06-PULLING HOOK
1	MAURICIUS-1-07-PORT BLOCK MOUNTING BRACKET
1	MAURICIUS-1-08-PORT BLOCK
1	MAURICIUS-1-09-REAR TOP CROSS BRACE
1	MAURICIUS-1-10-FRONT BOTTOM CROSS BRACE
1	MAURICIUS-1-11-BOILER REAR MOUNTING PLATE
3	MAURICIUS-1-12-LARGE BURNER
1	MAURICIUS-1-13-SMALL BURNER
1	MAURICIUS-1-14-FUEL SUPPLY TANK
1	MAURICIUS-1-15-BURNER SUPPLY PIPE
1	MAURICIUS-1-16-FUEL SUPPLY TANK VALVE
2	MAURICIUS-1-17-FRONT FOOT PLATE BRACKET
2	MAURICIUS-1-18-REAR FOOT PLATE BRACKET
1	MAURICIUS-1-19-EXHAUST STEAM BLOCK

QTY.	PART NUMBER
2	MAURICIUS-2-01-WHEEL AXLE+WHEELS
1	MAURICIUS-2-01-WHEEL AXLE+WHEELS
1	MAURICIUS-2-02-DRIVEN WHEEL AXLE GEAR WHEEL
2	MAURICIUS-2-03-COUPLING ROD
1	MAURICIUS-2-04-CRANK PLATE+GEAR
1	MAURICIUS-2-05-CYLINDER
1	MAURICIUS-2-06-PISTON
1	MAURICIUS-2-07-REVERSER TOP
1	MAURICIUS-2-08-PRESSURE SPRING
1	MAURICIUS-2-09-REVERSER LOCKING SCREW

QTY.	PART NUMBER
1	MAURICIUS-3-01-FOOTPLATE
4	MAURICIUS-3-02-STEPS
1	MAURICIUS-3-03-OILER HOUSING
3	MAURICIUS-3-04-LANTARN
1	MAURICIUS-3-05-AIR TANK
1	MAURICIUS-3-06-OILER TO PORT BLOCK PIPE
1	MAURICIUS-3-07-FLAME PROTECTOR
1	MAURICIUS-3-08-SMOKE BOX
1	MAURICIUS-3-09-SMOKE BOX DOOR
1	MAURICIUS-3-10-SMOKE BOX DOOR LOCKING SCREW
1	MAURICIUS-3-11-LH-BOILER SIDE COVER
1	MAURICIUS-3-12-RH-BOILER SIDE COVER
1	MAURICIUS-3-13-BLOWER PIPE
1	MAURICIUS-3-14-FWD-REV BRACKET

QTY.	PART NUMBER
1	MAURICIUS-4-01-BOILER SHELL
1	MAURICIUS-4-02-STEAM COLLECTOR SCREW
1	MAURICIUS-4-03-SADDLE TANK COVER
10	MAURICIUS-4-04-HAND RAIL SUPPORT
1	MAURICIUS-4-05-FRONT HAND RAIL
2	MAURICIUS-4-06-SIDE HAND RAIL
1	MAURICIUS-4-07-CHIMNEY
1	MAURICIUS-4-08-STEAM DOME
1	MAURICIUS-4-09-STEAM MANIFOLD
1	MAURICIUS-4-10-BLOWER VALVE
1	MAURICIUS-4-11-BLOWER VALVE PIPE
1	MAURICIUS-4-12-STEAM SUPPLY VALVE
3	MAURICIUS-4-13-M8x5x8 PIPE NUT
1	MAURICIUS-4-14-STEAM SUPPLY VALVE SPINDLE NUT
1	MAURICIUS-4-15-STEAM SUPPLY PIPE
1	MAURICIUS-4-16-PRESSURE GAUGE
1	MAURICIUS-4-17-SAFETY VALVE
1	MAURICIUS-4-18-FEED WATER SUPPLY RING
3	MAURICIUS-4-19-M6x4x7 PIPE NUT
1	MAURICIUS-4-20-EXT FD PMP CONNECTOR HOUSING
1	MAURICIUS-4-21-M8x8 STOP NUT

NOTES: THIS LOCO IS LOOSELY BASED ON DRAWINGS/SKETCHES/PICTURES FOUND ON THE INTERET AND AN OLD MODEL ENGINEERING MAGAZINE.

TITLE
A SPIRIT FIRED SIMPLE 0-6-0 SADDLE TANK STEAM LOCOMOTIVE GAUGE-3 (2.5"-64mm)

DRAWING CONTENTS
ISOMETRIC VIEW, BILL OF MATERIAL AND NOTES

PROJECT No 07B-14-00
JDW DRAUGHTING SERVICES
J.A.M. DE WAAL. 12 BRIGHTWELL STREET PAPAKURA 2110. NEW ZEALAND. PHONE: 0064 09 2988815. MOB: 0211791000
E-MAIL: dewaal@xtra.co.nz.

PROJECTION JDWDS
DATE AUGUST-2017
SHEET: 02 OF 08

MODEL SCALE: 1:1
DWG SCALE: 1:1 @A3 OR AS SHOWN
Copyright © J.A.M. DE WAAL PAPAKURA NZ
A3 No: MAURICIUS-02

RIGTH HAND FRAME
FOR LEFT HAND FRAME REFER SHEET 04

REFER TO 1-04 FOR ALL DIMENSION DETAILS

NOTES: THIS LOCO IS LOOSELY BASED ON DRAWINGS/SKETCHES/PICTURES FOUND ON THE INTERET AND AN OLD MODEL ENGINEERING MAGAZINE.

TITLE
A SPIRIT FIRED SIMPLE 0-6-0 SADDLE TANK STEAM LOCOMOTIVE GAUGE-3 (2.5"-64mm)

DRAWING CONTENTS
PARTS AND ASSEMBLIES

JDW DRAUGHTING SERVICES
J.A.M. DE WAAL. 12 BRIGHTWELL STREET PAPAKURA 2110. NEW ZEALAND. PHONE: 0064 09 2988815. MOB: 0211791000
E-MAIL: dewaal@xtra.co.nz.

PROJECT No 07B-14-00
PROJECTION JDWDS
DATE AUGUST-2017
SHEET: 03 OF 08
MODEL SCALE: 1:1
DWG SCALE: 1:1 @A3 OR AS SHOWN
Copyright © J.A.M. DE WAAL PAPAKURA NZ
A3 No: MAURICIUS-03

SA-1-101

SA-1-102

SA-1-103

SOLDER ALL AROUND

SA-1-103

SA-1-105

SA-2-201

SA-2-205

SECTION A-A

SECTION B-B
SCALE 1 : 1.5

SECTION C-C
SCALE 1 : 2

SCALE 1:1.5

SCALE 1:2

15 SPOKES

36 TEETH

15 TEETH

15 COILS

IN ONE AXLE ONLY

OPPOSITE FACE EQUAL

SOLDER AFTER ASSEMBLY

LEFT HAND FRAME

FRONT

NOTES: THIS LOCO IS LOOSELY BASED ON DRAWINGS/SKETCHES/PICTURES FOUND ON THE INTERET AND AN OLD MODEL ENGINEERING MAGAZINE.

TITLE
A SPIRIT FIRED SIMPLE 0-6-0 SADDLE TANK STEAM LOCOMOTIVE GAUGE-3 (2.5"-64mm)

DRAWING CONTENTS
PARTS AND ASSEMBLIES

PROJECT No 07B-14-00
JDW DRAUGHTING SERVICES
J.A.M. DE WAAL. 12 BRIGHTWELL STREET PAPAKURA 2110. NEW ZEALAND. PHONE: 0064 09 2988815. MOB: 0211791000
E-MAIL: dewaal@xtra.co.nz.

PROJECTION JDWDS
DATE AUGUST-2017
SHEET: 04 OF 08

MODEL SCALE: 1:1
DWG SCALE: 1:1 @A3 OR AS SHOWN
Copyright © J.A.M. DE WAAL PAPAKURA NZ
A3 No: MAURICIUS-04

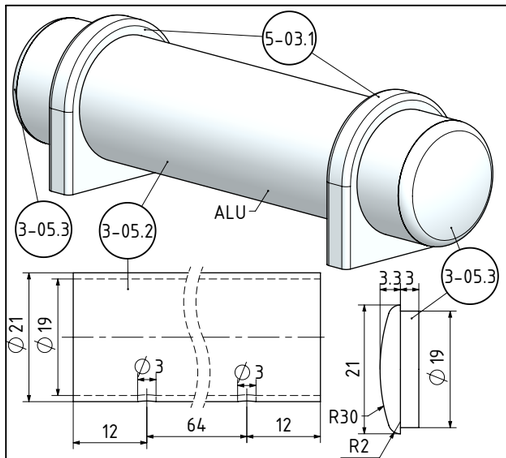

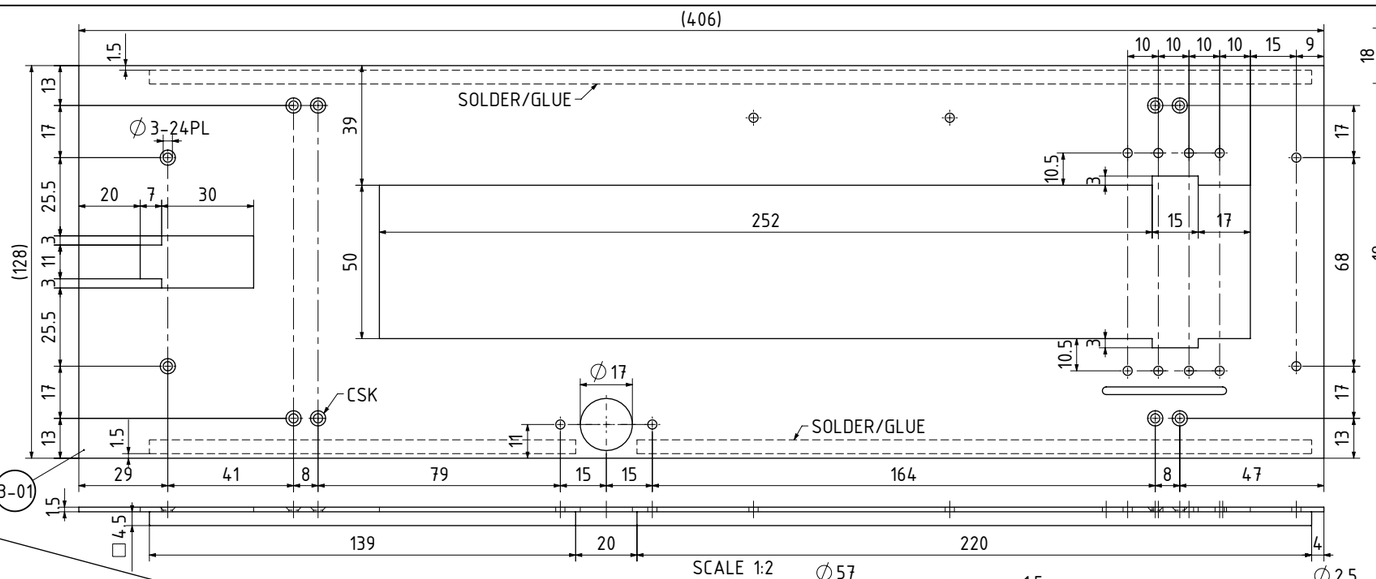

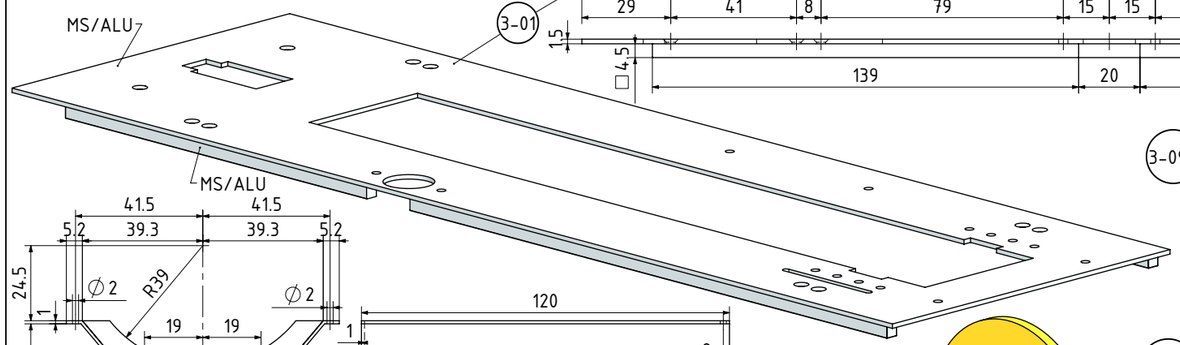

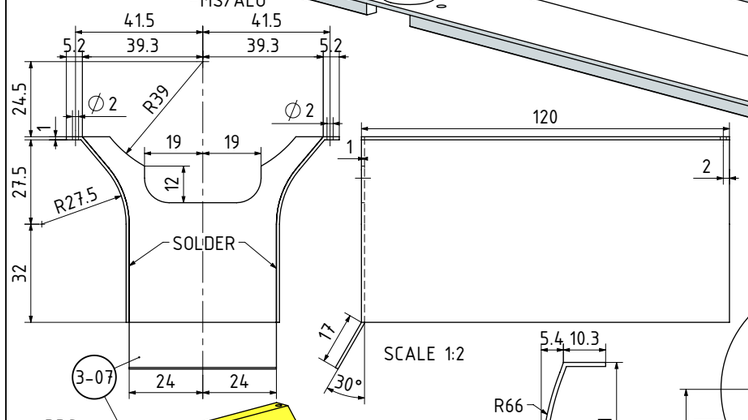

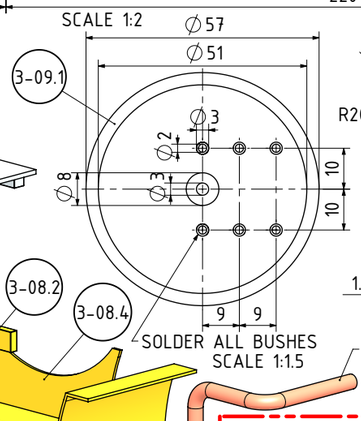

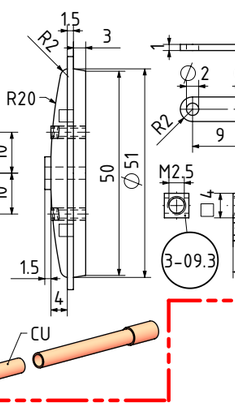

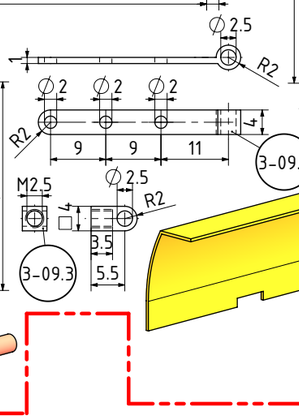

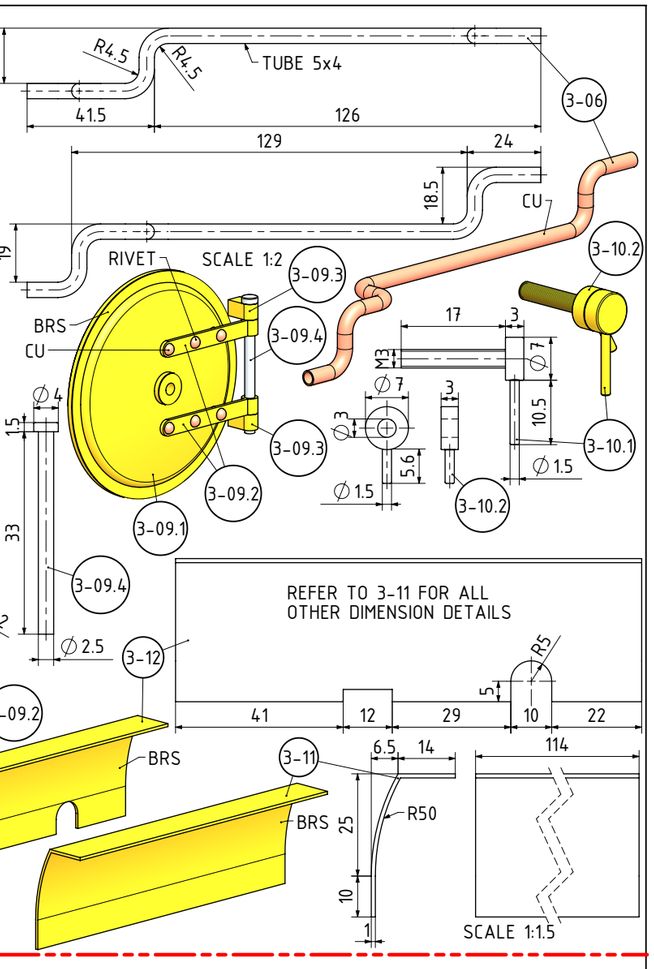

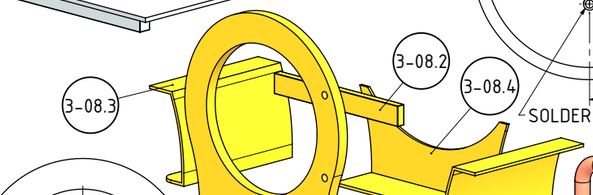

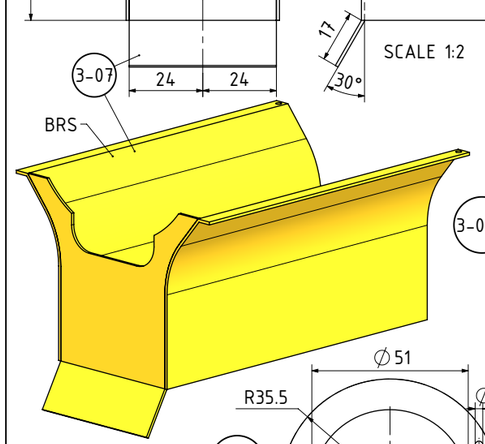

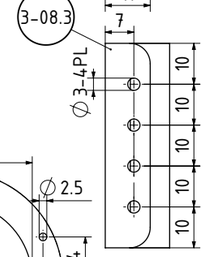

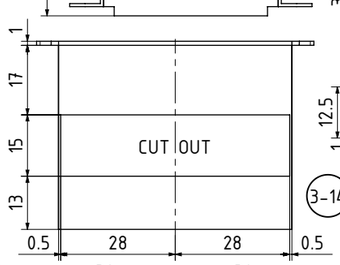

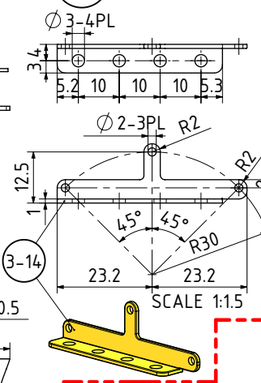

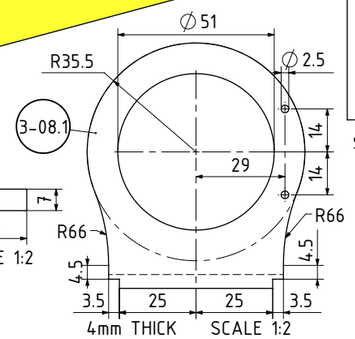

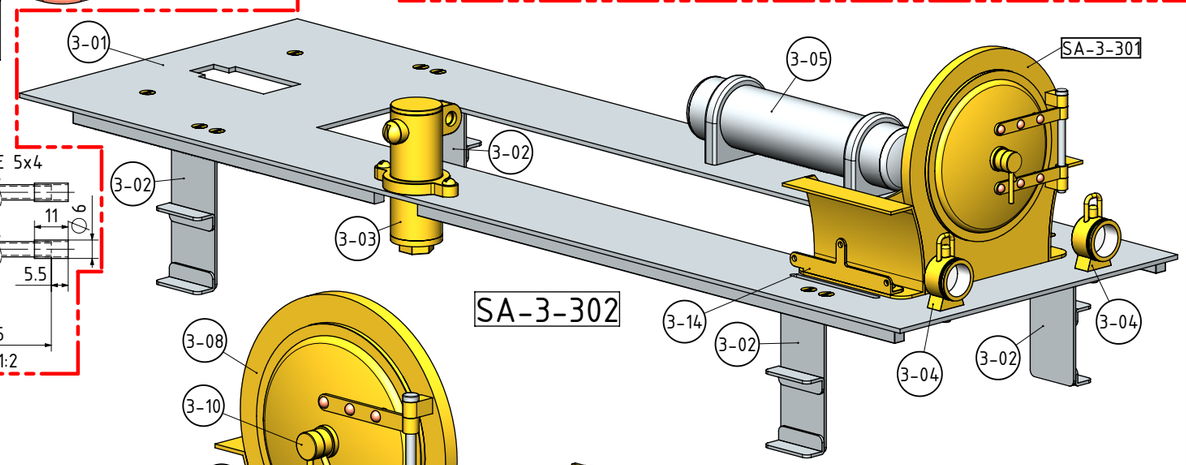

NOTES: THIS LOCO IS LOOSELY BASED ON DRAWINGS/SKETCHES/PICTURES FOUND ON THE INTERET AND AN OLD MODEL ENGINEERING MAGAZINE.

TITLE

A SPIRIT FIRED SIMPLE 0-6-0 SADDLE TANK STEAM LOCOMOTIVE GAUGE-3 (2.5"-64mm)

DRAWING CONTENTS

PARTS AND ASSEMBLIES

PROJECT No 07B-14-00

JDW DRAUGHTING SERVICES

J.A.M. DE WAAL. 12 BRIGHTWELL STREET PAPAKURA 2110. NEW ZEALAND. PHONE: 0064 09 2988815. MOB: 0211791000 E-MAIL: dewaal@xtra.co.nz.

PROJECTION JDWDS

DATE AUGUST-2017

SHEET: 05 OF 08

MODEL SCALE: 1:1

DWG SCALE: 1:1 @A3 OR AS SHOWN

Copyright © J.A.M. DE WAAL PAPAKURA NZ

A3 No: MAURICIUS-05

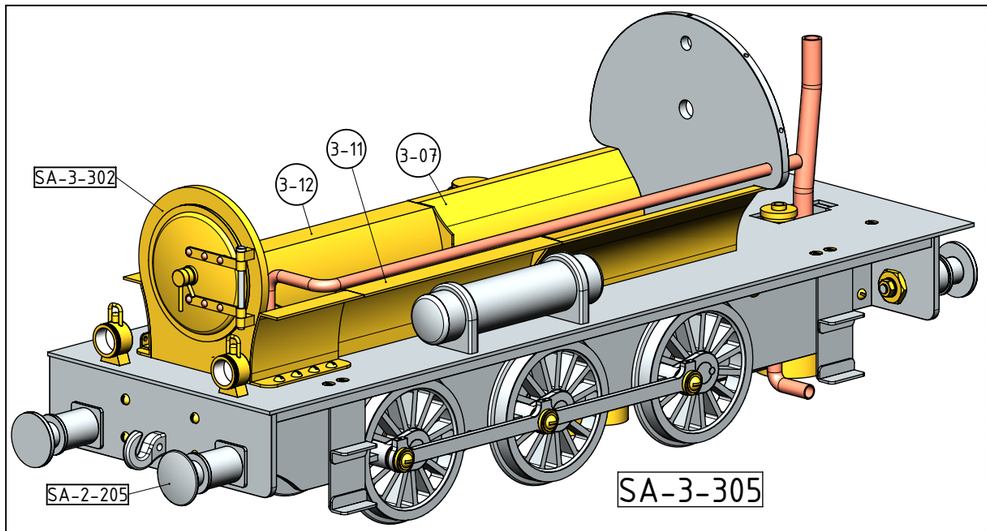

SA-3-305

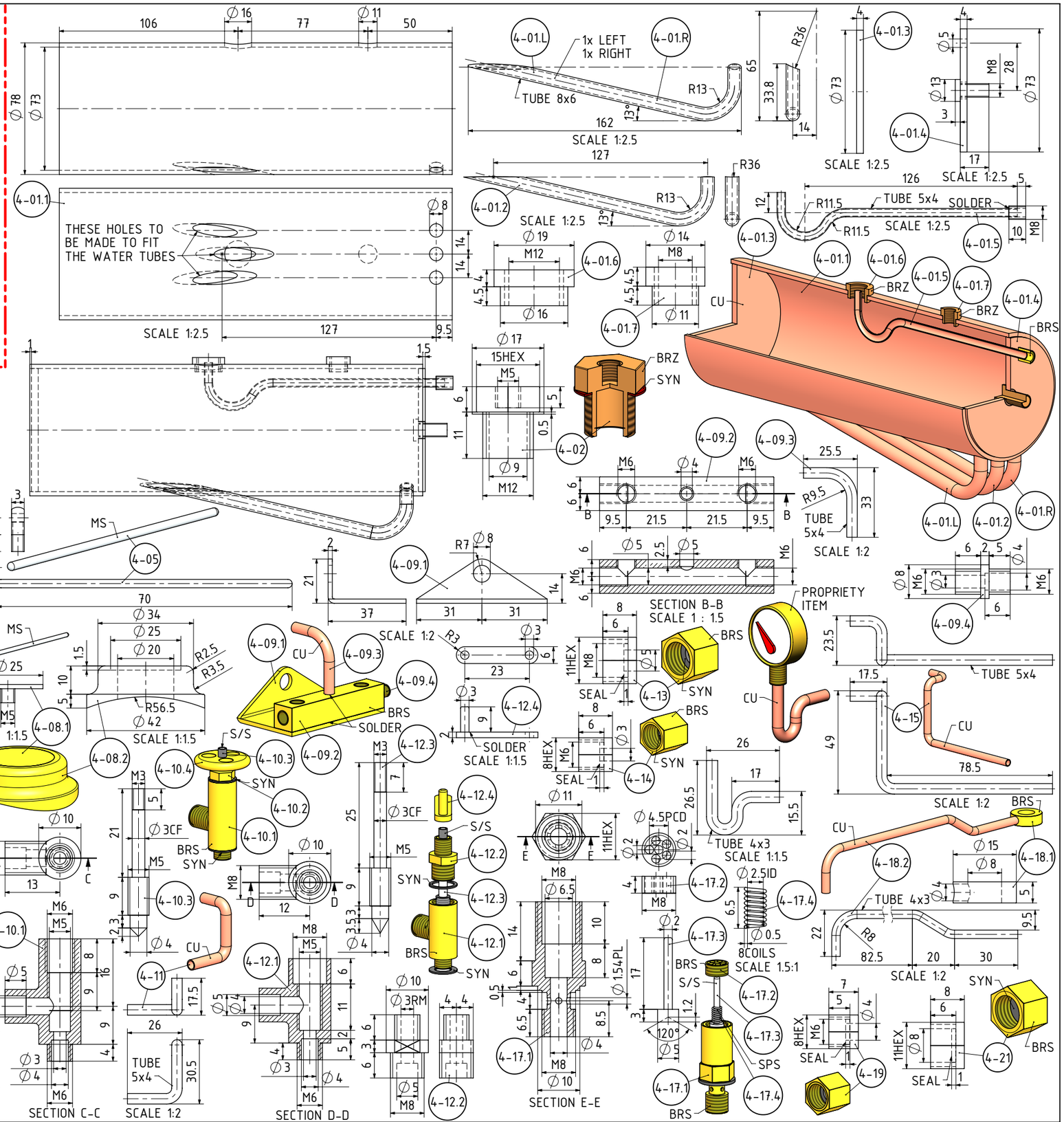

NOTES: THIS LOCO IS LOOSELY BASED ON DRAWINGS/SKETCHES/PICTURES FOUND ON THE INTERET AND AN OLD MODEL ENGINEERING MAGAZINE.

TITLE

A SPIRIT FIRED SIMPLE 0-6-0 SADDLE TANK STEAM LOCOMOTIVE GAUGE-3 (2.5"-64mm)

DRAWING CONTENTS

PARTS AND ASSEMBLIES

PROJECT No 07B-14-00

JDW DRAUGHTING SERVICES

J.A.M. DE WAAL. 12 BRIGHTWELL STREET PAPAKURA 2110. NEW ZEALAND. PHONE: 0064 09 2988815. MOB: 0211791000 E-MAIL: dewaal@xtra.co.nz.

PROJECTION JDWDS

DATE AUGUST-2017

SHEET: 06 OF 08

MODEL SCALE: 1:1

DWG SCALE: 1:1 @A3 OR AS SHOWN

Copyright © J.A.M. DE WAAL PAPAKURA NZ

A3 No: MAURICIUS-06

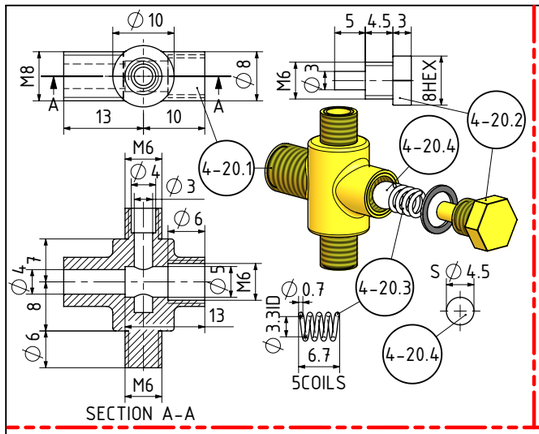

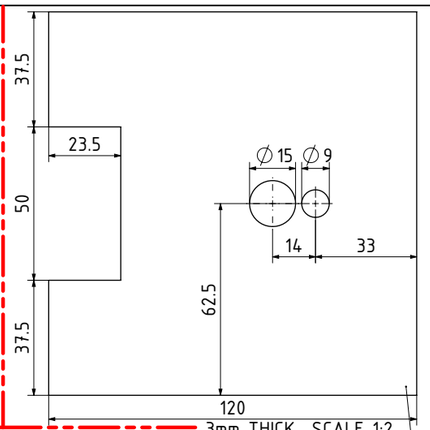

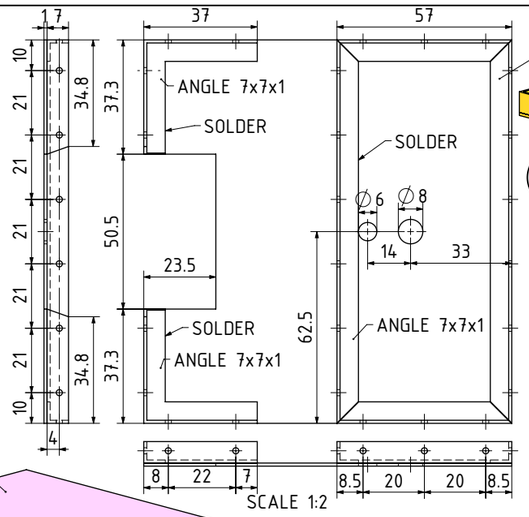

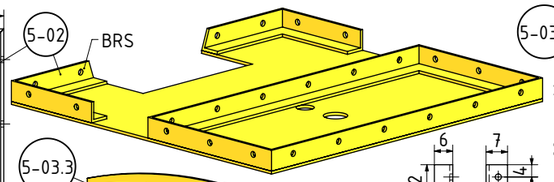

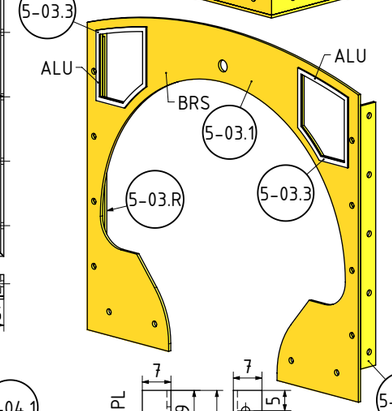

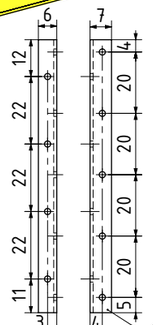

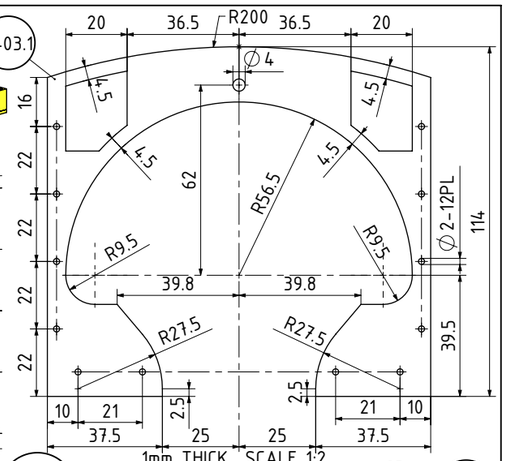

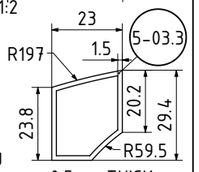

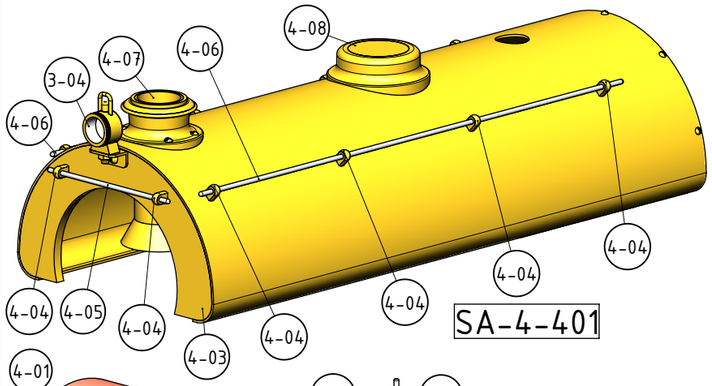

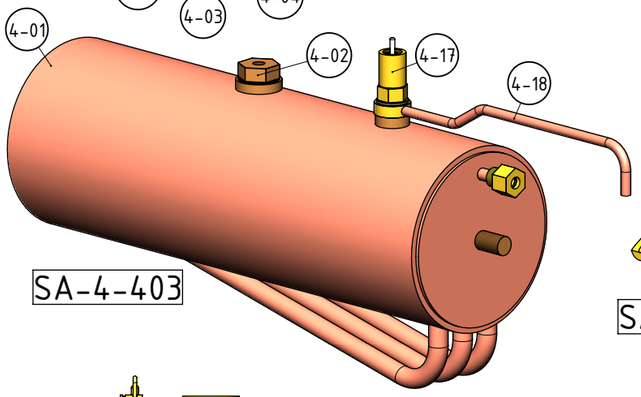

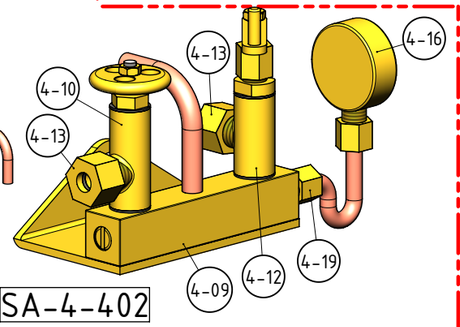

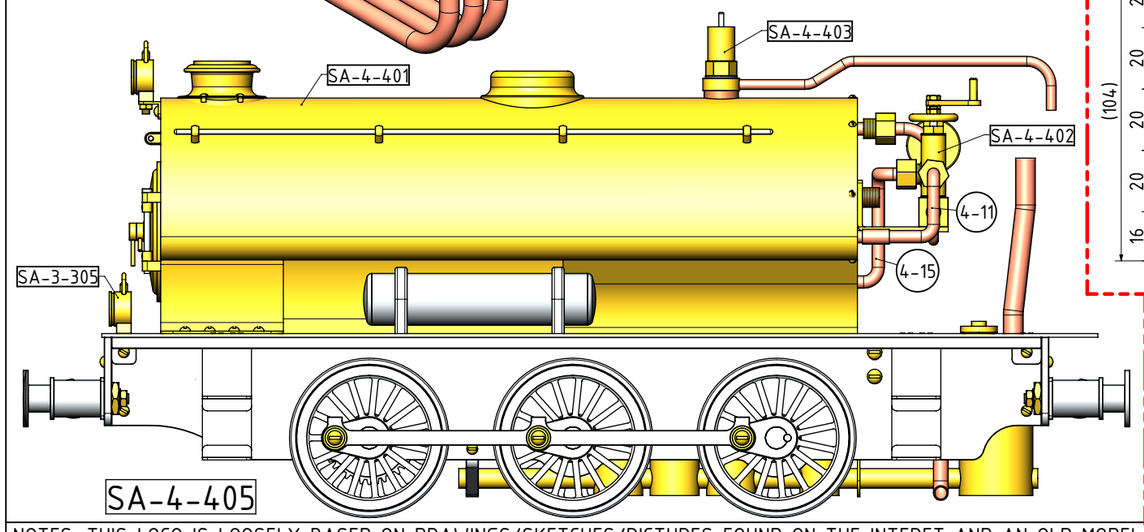

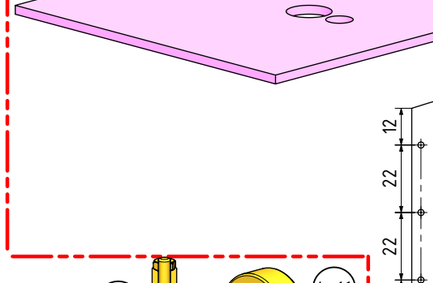

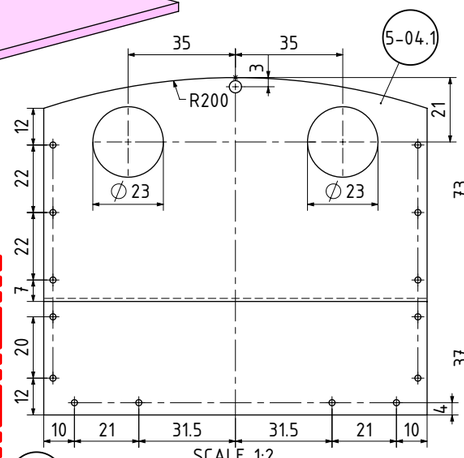

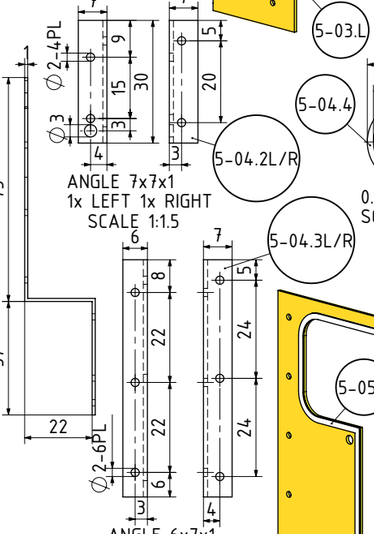

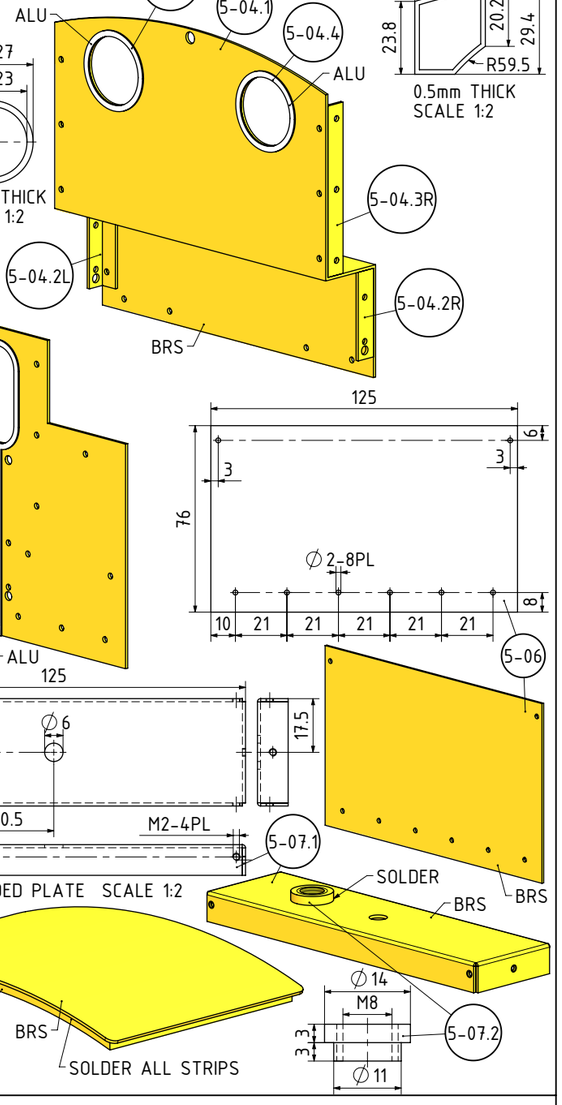

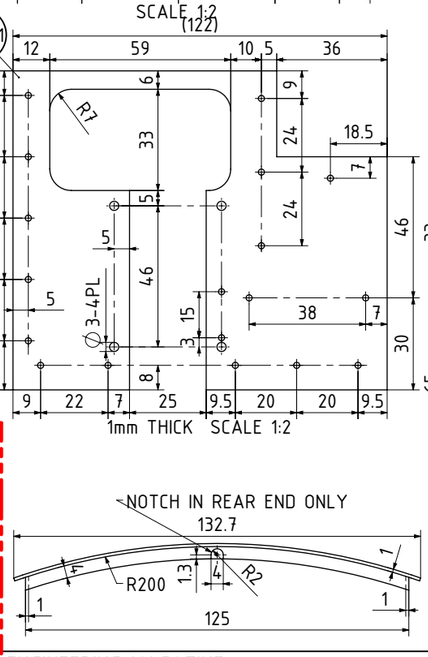

NOTES: THIS LOCO IS LOOSELY BASED ON DRAWINGS/SKETCHES/PICTURES FOUND ON THE INTERET AND AN OLD MODEL ENGINEERING MAGAZINE.

TITLE

A SPIRIT FIRED SIMPLE 0-6-0 SADDLE TANK STEAM LOCOMOTIVE GAUGE-3 (2.5"-64mm)

DRAWING CONTENTS

PARTS AND ASSEMBLIES

PROJECT No 07B-14-00

JDW DRAUGHTING SERVICES

J.A.M. DE WAAL. 12 BRIGHTWELL STREET PAPAKURA 2110. NEW ZEALAND. PHONE: 0064 09 2988815. MOB: 0211791000 E-MAIL: dewaal@xtra.co.nz.

PROJECTION JDWDS

DATE AUGUST-2017

SHEET: 07 OF 08

MODEL SCALE: 1:1

DWG SCALE: 1:1 @A3 OR AS SHOWN

Copyright © J.A.M. DE WAAL PAPAKURA NZ

A3

No: MAURICIUS-07

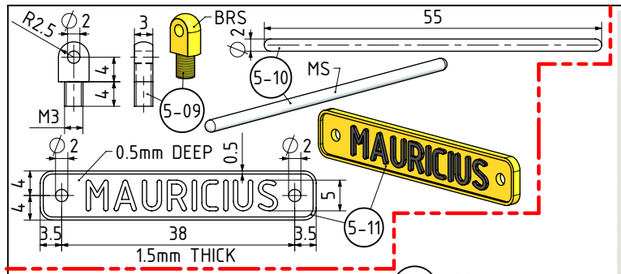

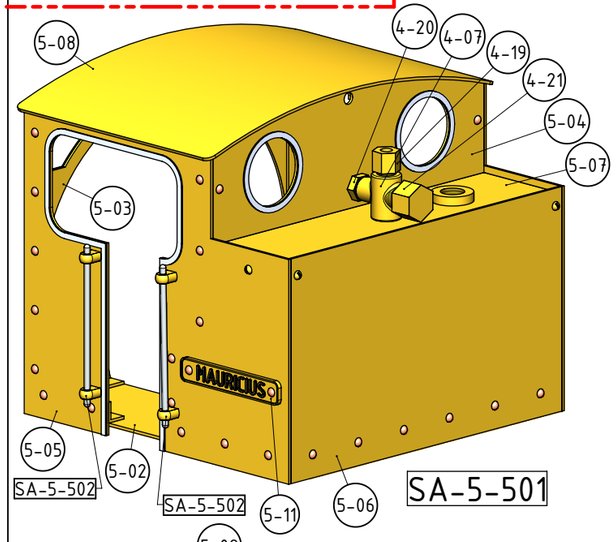

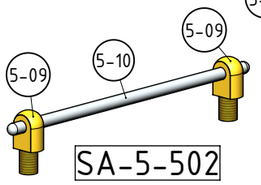

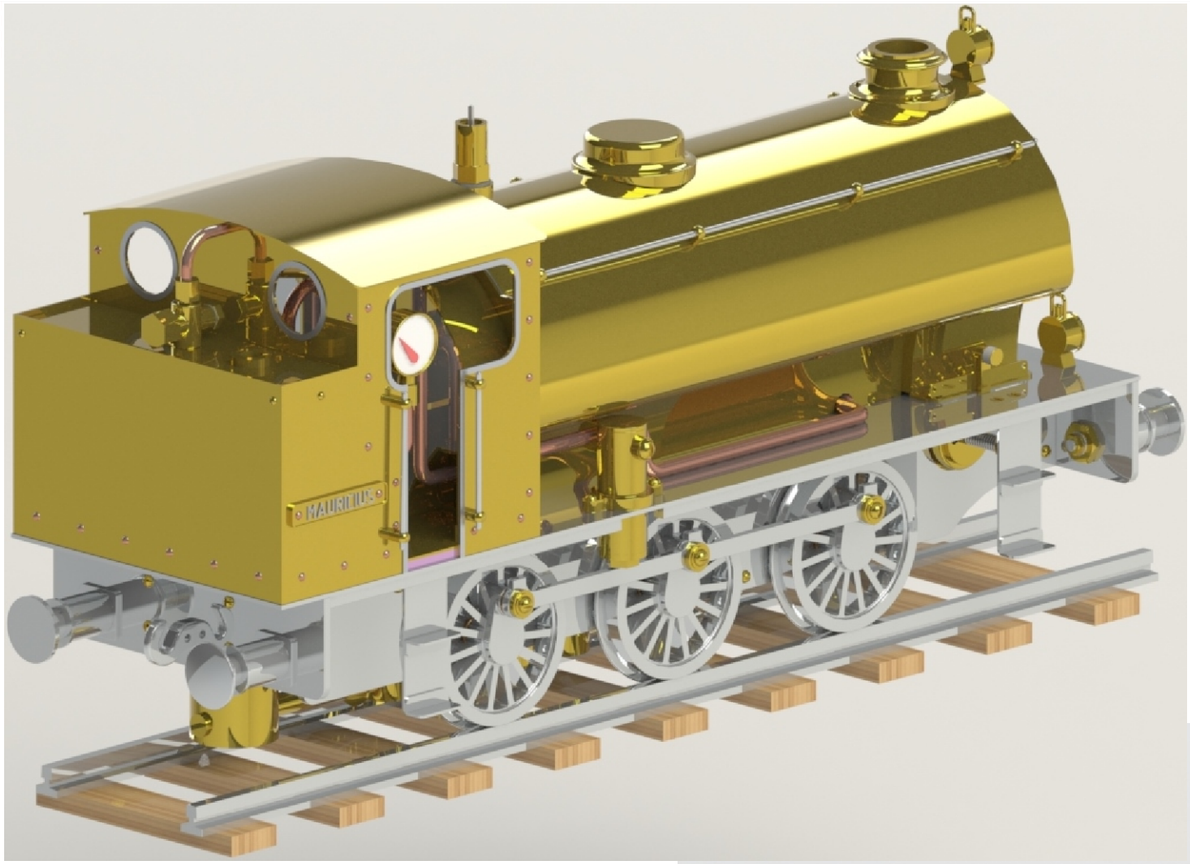

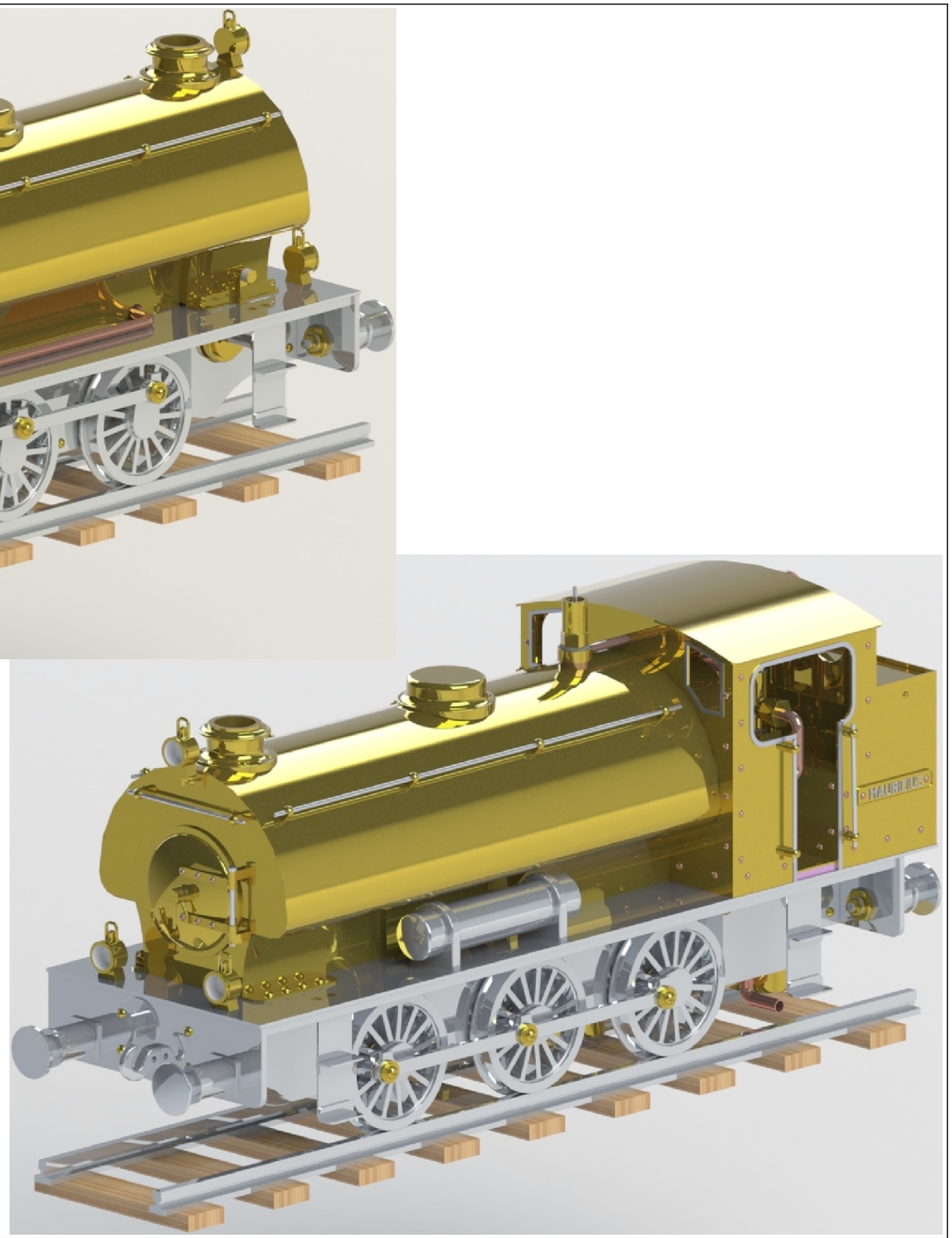

THE ROOF TO HAVE A LIGHT PUSH FIT
IT MUST BE ABLE TO BE REMOVED EASILY

SOME ADDED EXTRA'S IF SO DESIRED:
1) REAR LANTARNS
2) WATER LEVEL VALVE OR INDICATOR
3) BOILER INSULATION MANTEL
4) WHISTLE

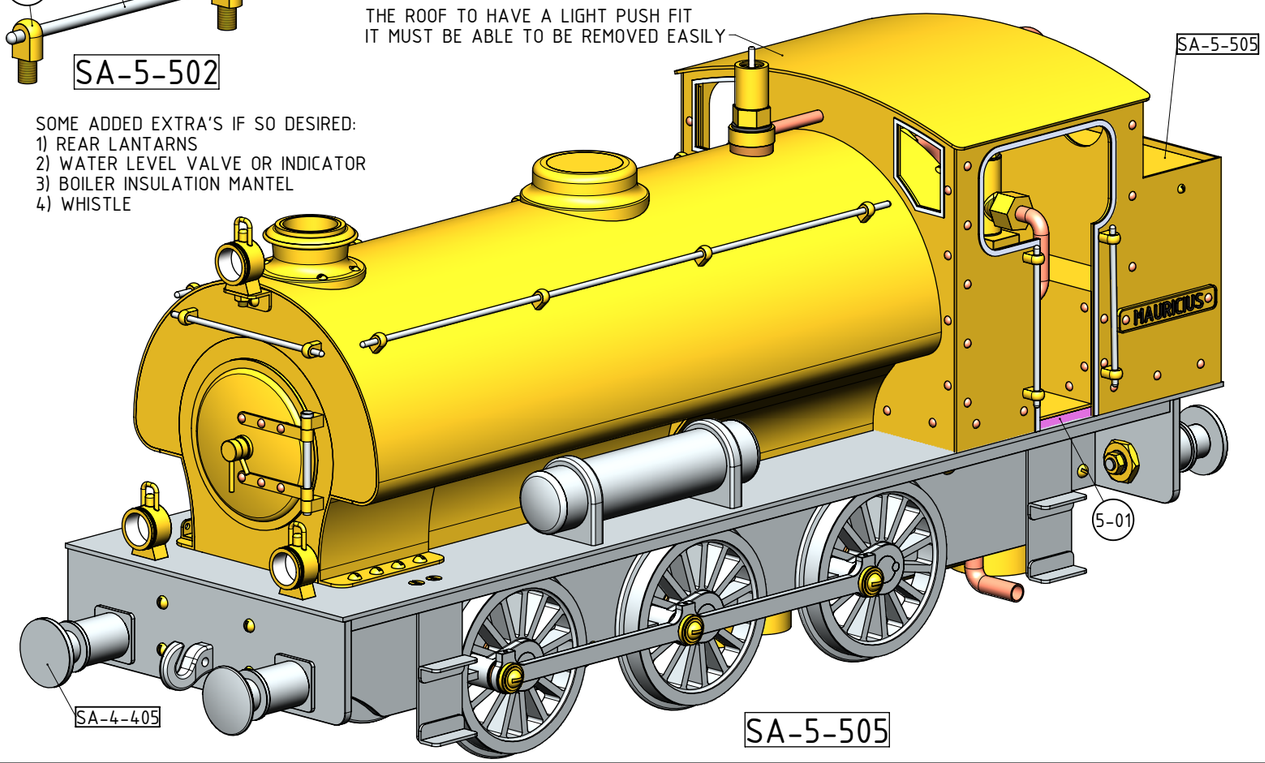

NOTES: THIS LOCO IS LOOSELY BASED ON DRAWINGS/SKETCHES/PICTURES FOUND ON THE INTERET AND AN OLD MODEL ENGINEERING MAGAZINE.

TITLE
A SPIRIT FIRED SIMPLE 0-6-0 SADDLE TANK STEAM LOCOMOTIVE GAUGE-3 (2.5"-64mm)

DRAWING CONTENTS
PARTS AND ASSEMBLIES

PROJECT No 07B-14-00
JDW DRAUGHTING SERVICES
J.A.M. DE WAAL. 12 BRIGHTWELL STREET PAPAKURA 2110
NEW ZEALAND. PHONE: 0064 09 2988815. MOB: 0211791000
E-MAIL: dewaal@xtra.co.nz.

PROJECTION JDWDS
DATE AUGUST-2017
SHEET: 08 OF 08

MODEL SCALE: 1:1
DWG SCALE: 1:1 @A3 OR AS SHOWN
Copyright © J.A.M. DE WAAL PAPAKURA NZ
A3 No: MAURICIUS-08