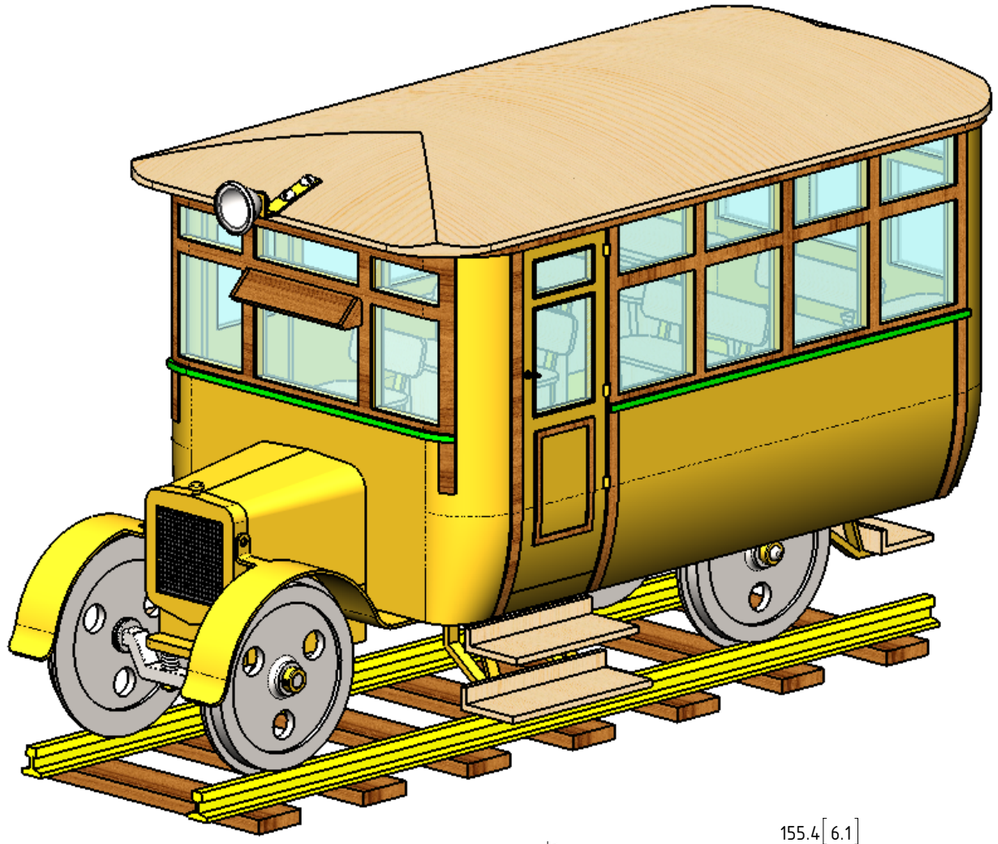

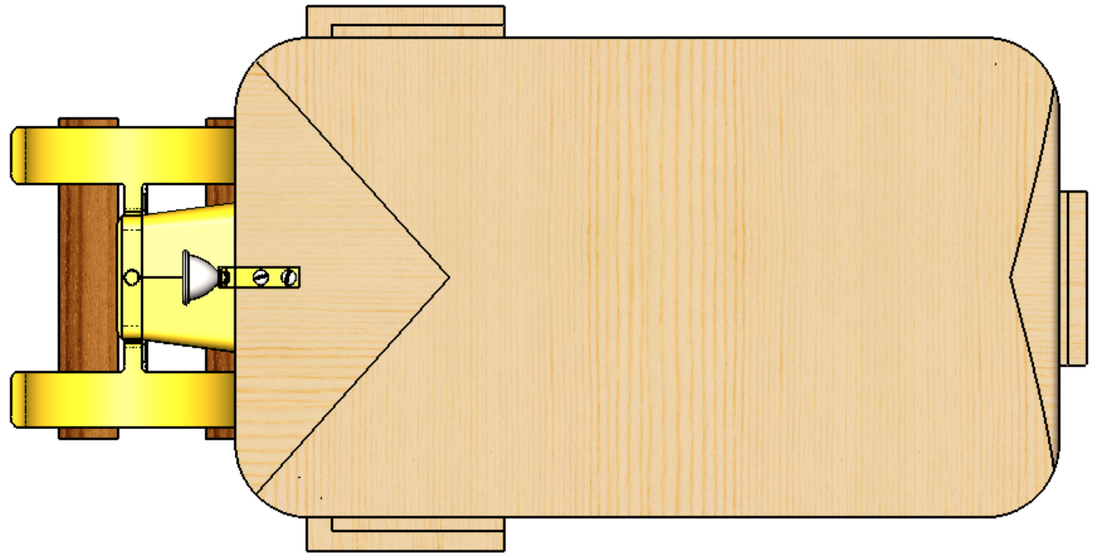

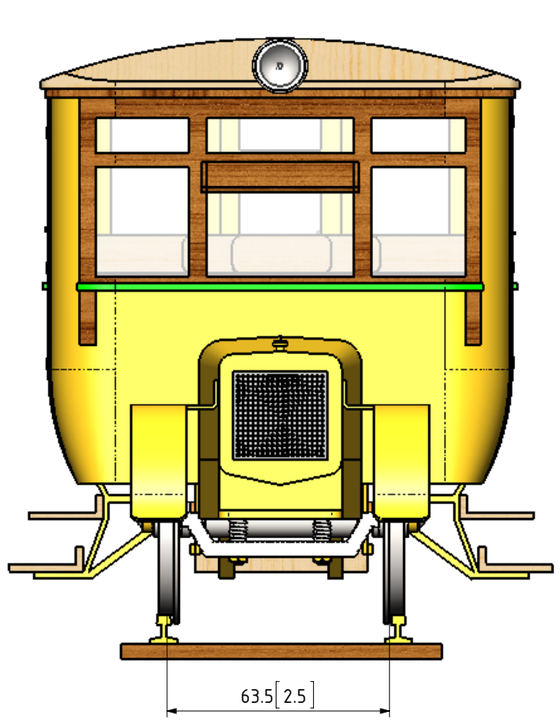


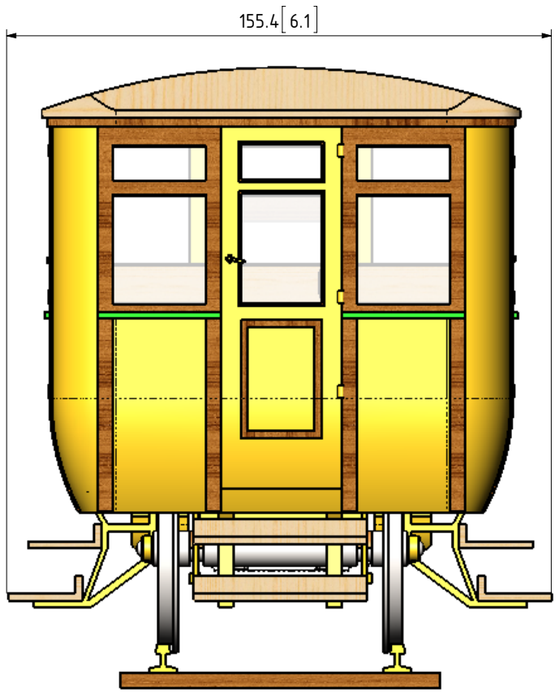


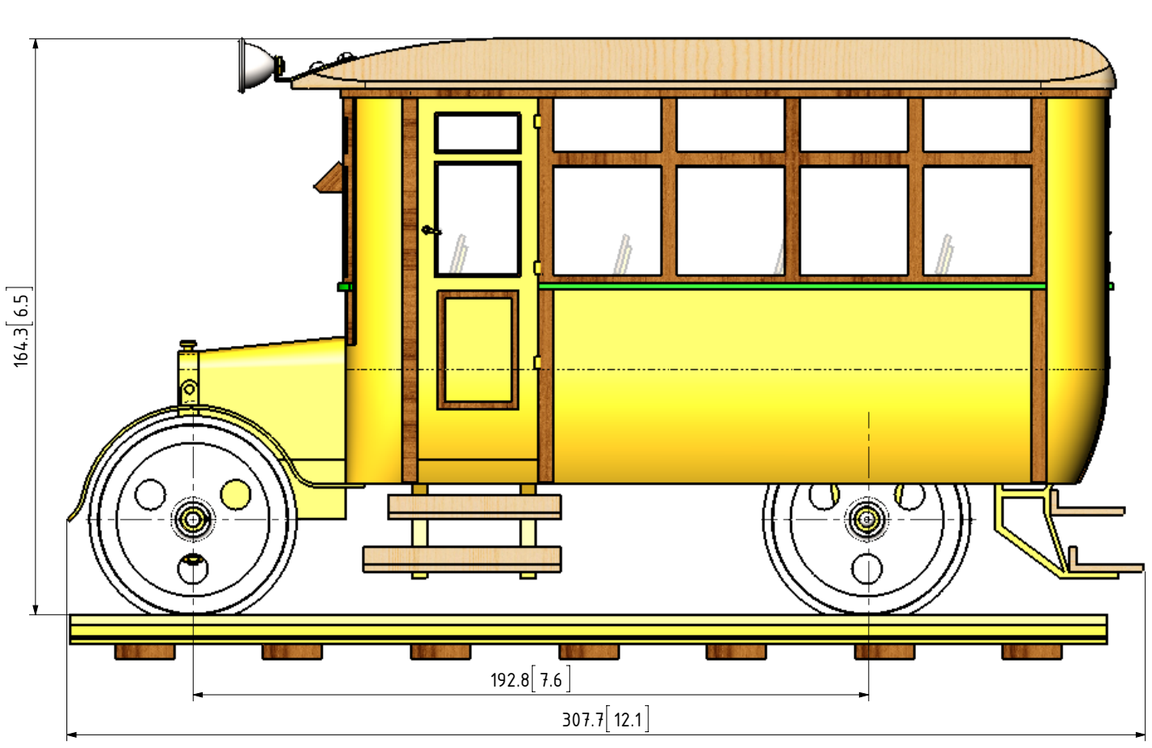


NOTES:

TITLE

# NZR RAILCAR RM4 (MODEL T PETROL DRIVEN)

DRAWING CONTENTS

## GENERAL ARRANGEMENT

PROJECT No

JDW DRAUGHTING SERVICES

J.A.M. DE WAAL. 12 BRIGHTWELL STREET PAPAKURA 2110. NEW ZEALAND. PHONE: 0064 09 2988815. MOB: 0211791000 E-MAIL: dewaal@xtra.co.nz.

PROJECTION

DATE JANUARY-2014

SHEET:01 OF 03

MODEL SCALE: 1:16.8 TRACK 63.5mm

DWG SCALE: NTS @A3 OR AS SHOWN

Copyright © J.A.M. DE WAAL PAPAKURA NZ

A3 No: RM4-01

| QTY. | PART NUMBER |
|---|---|
| 1 | RM4-01-FLOOR |
| 1 | RM4-02-MAIN BODY |
| 1 | RM4-03-ROOF |
| 1 | RM4-04-TOP TRIMMING |
| 1 | RM4-05-REAR AXLE |
| 1 | RM4-06-SUN VISOR |
| 4 | RM4-07-WHEEL AXLE LOCK |
| 1 | RM4-08-HOOD |
| 4 | RM4-11-WHEEL |
| 2 | RM4-12-SPRING |
| 1 | RM4-13-LONG PASSENGERS SEAT |
| 4 | RM4-14-SHORT PASSENGERS SEAT |
| 3 | RM4-15-STEPS |
| 1 | RM4-16-REAR AXLE HOLDER |
| 1 | RM4-17A-HEAD LAMP BRACKET |
| 1 | RM4-17B-HEAD LAMP |
| 1 | RM4-18-FRONT AXLE |
| 3 | RM4-19-DOOR |
| 1 | RM4-20-DRIVERS SEAT |
| 2 | RM4-21-DOOR TRIMMING |
| 2 | RM4-22-WINDOW TRIMMING |
| 1 | RM4-23-FRONT WINDOW TRIMMING |
| 2 | RM4-24-REAR WINDOW TRIMMING |
| 1 | RM4-25-HOOD AND FRONT AXLE SUPPORT |
| 1 | RM4-26-BACK STEPS |
| 1 | RM4-27A-L-H SIDE STEPS |
| 1 | RM4-27B-R-H SIDE STEPS |
| 8 | RM4-40-31x15.5 GLASS PANEL |
| 8 | RM4-41-31x31 GLASS PANEL |
| 4 | RM4-42-31x27 GLASS PANEL |
| 1 | RM4-43-31x42 GLASS PANEL |
| 4 | RM4-44-27x10 GLASS PANEL |
| 1 | RM4-45-42x10GLASS PANEL |
| 3 | RM4-46-31x23 GLASS PANEL |
| 3 | RM4-47-10x23 GLASS PANEL |
| 9 | RM4-48-DOOR HINGE |
| 3 | RM4-49-DOOR HANDLE |
| 1 | RM4-51-L-H CORNER SEAT |
| 1 | RM4-52-R-H CORNER SEAT |
| 1 | RM4-53-FRONT WHEEL MUD GUARD |
| 1 | RM4-53-FRONT WHEEL MUD GUARD |
| 7 | RM4-M3 NUT |
| 2 | RM4-M4x11 R-HEAD SCREW |
| 2 | RM4-M4x7 R-HEAD SCREW |
| 1 | RM4-RAIL TRACK 64mm (2.5in) |
| 2 | RM4-WOOD SCREW |

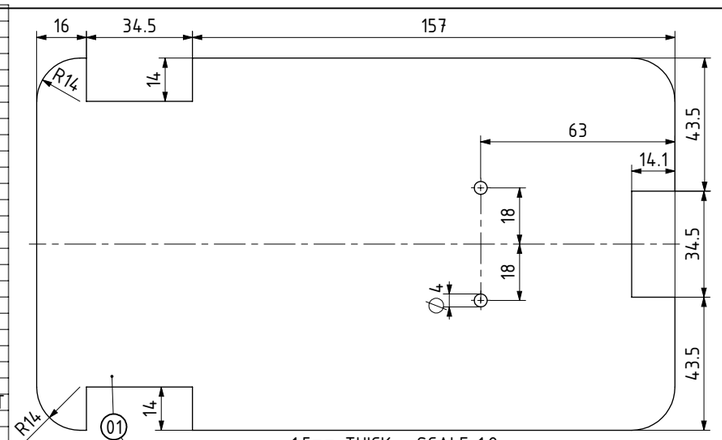


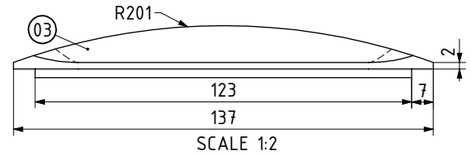


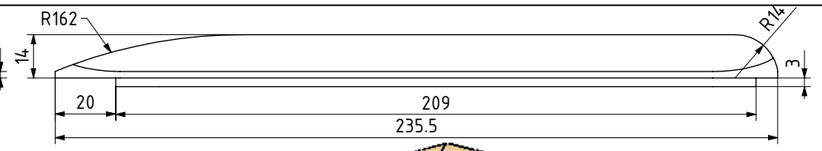


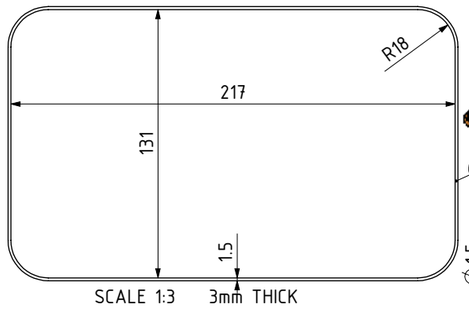


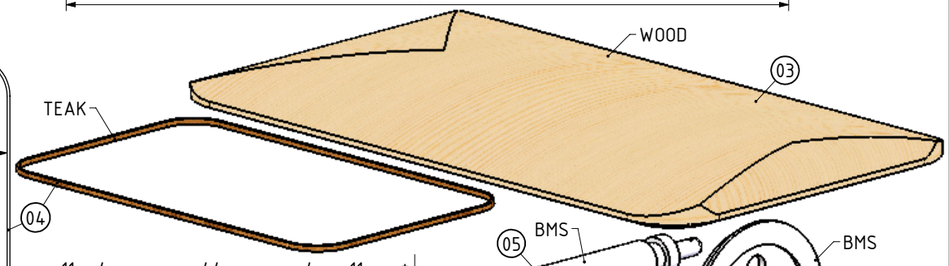


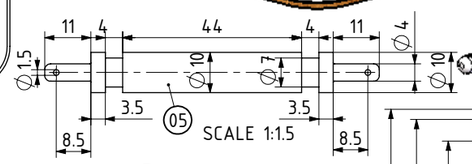


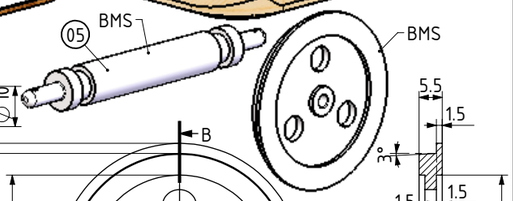


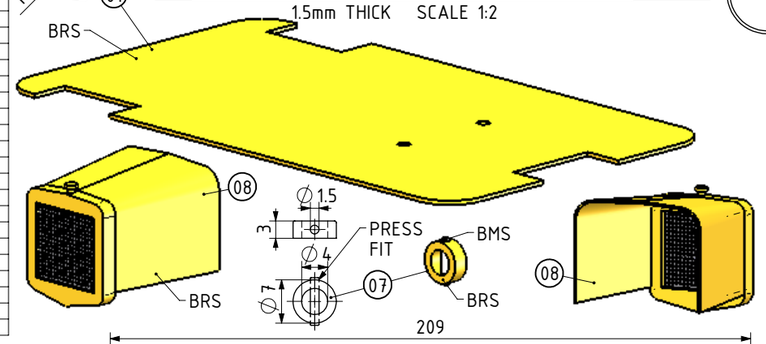


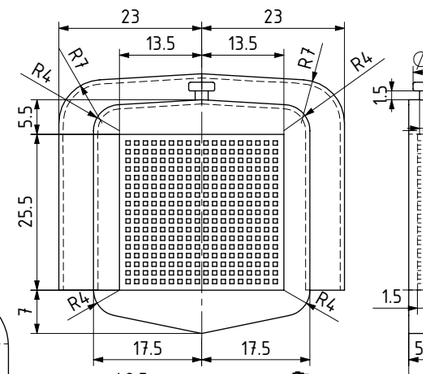


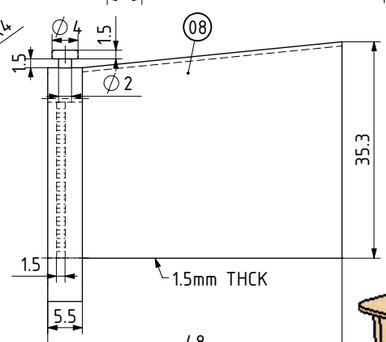





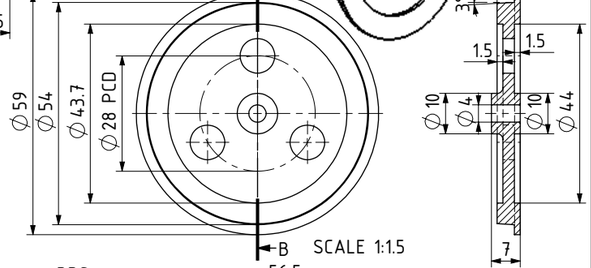


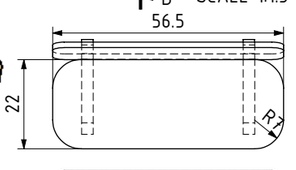





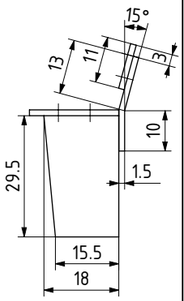


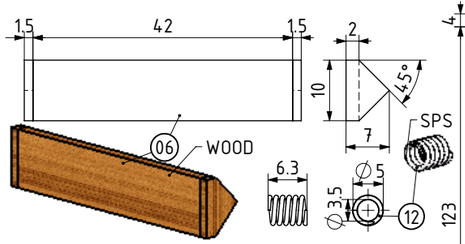


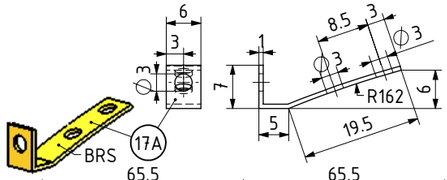


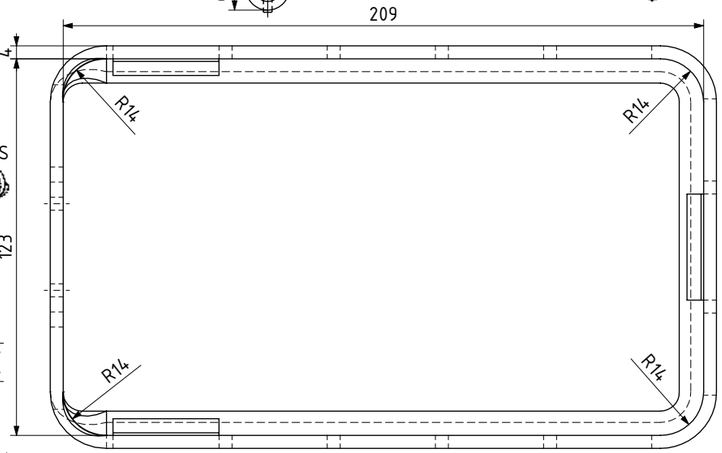


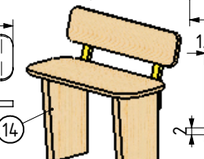


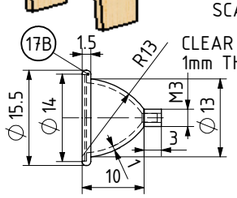


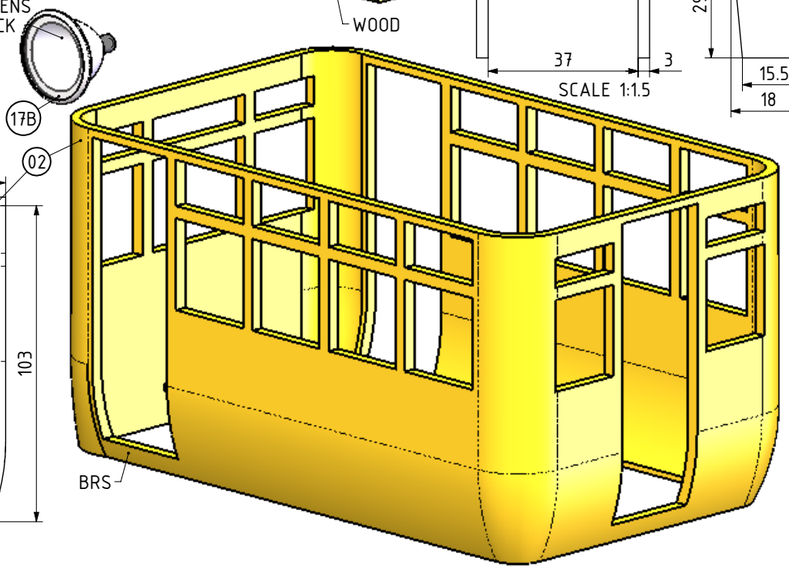


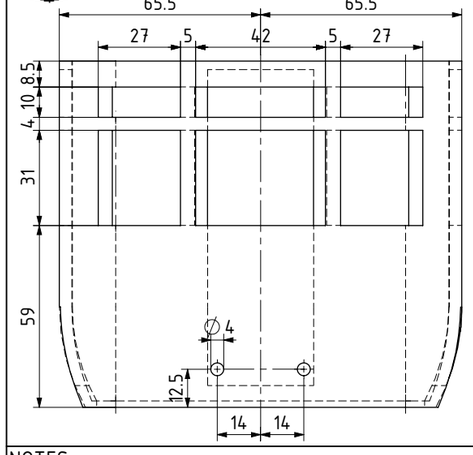


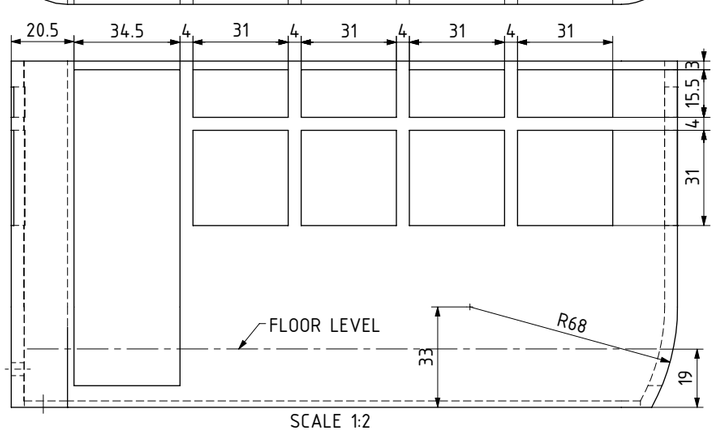


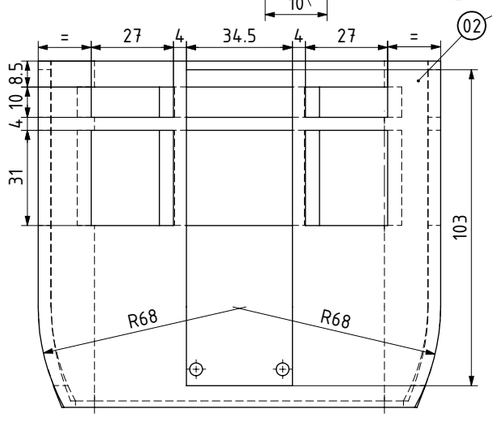


NOTES:

TITLE
# NZR RAILCAR RM4 (MODEL T PETROL DRIVEN)

DRAWING CONTENTS
## BOM, PARTS AND ASSEMBLIES


PROJECT No
JDW DRAUGHTING SERVICES
J.A.M. DE WAAL. 12 BRIGHTWELL STREET PAPAKURA 2110. NEW ZEALAND. PHONE: 0064 09 2988815. MOB: 0211791000
E-MAIL: dewaal@xtra.co.nz.


PROJECTION

DATE JANUARY-2014

SHEET:02 OF 03

MODEL SCALE: 1:16.8

DWG SCALE: 1:1 @A3 OR AS SHOWN

Copyright © J.A.M. DE WAAL PAPAKURA NZ

A3 No: RM4-02

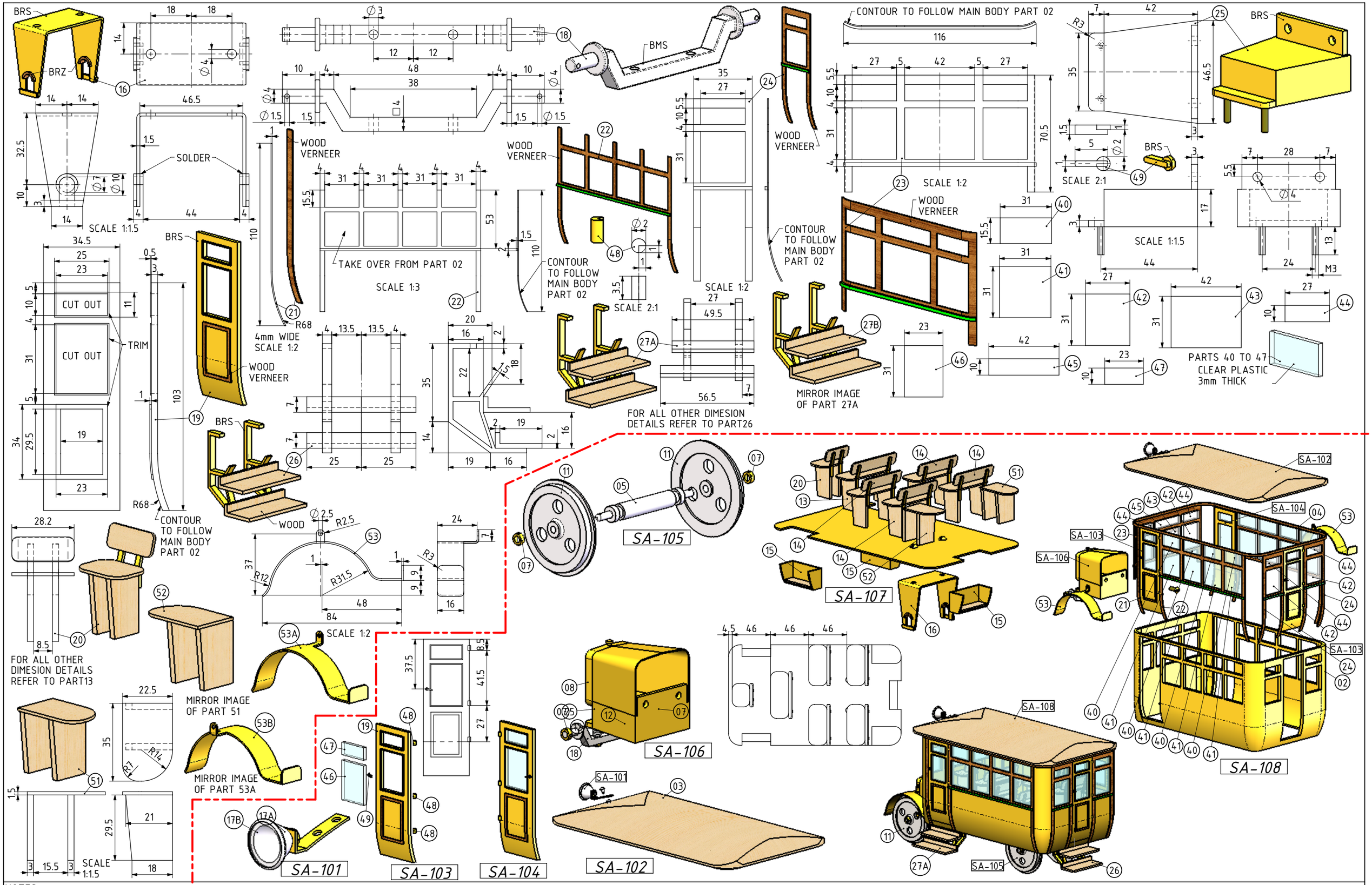


NOTES:

| TITLE | DRAWING CONTENTS | PROJECT No | PROJECTION | |
|---|---|---|---|---|
| NZR RAILCAR RM4 (MODEL T PETROL DRIVEN) | PARTS AND ASSEMBLIES | JDW DRAUGHTING SERVICES<br>J.A.M. DE WAAL. 12 BRIGHTWELL STREET PAPAKURA 2110. NEW ZEALAND. PHONE: 0064 09 2988815. MOB: 0211791000 E-MAIL: dewaal@xtra.co.nz. | DATE JANUARY-2014<br>SHEET:03 OF 04 | MODEL SCALE: 1:16.8<br>DWG SCALE: 1:1 @A3 OR AS SHOWN<br>Copyright © J.A.M. DE WAAL PAPAKURA NZ<br>A3 No: RM4-03 |

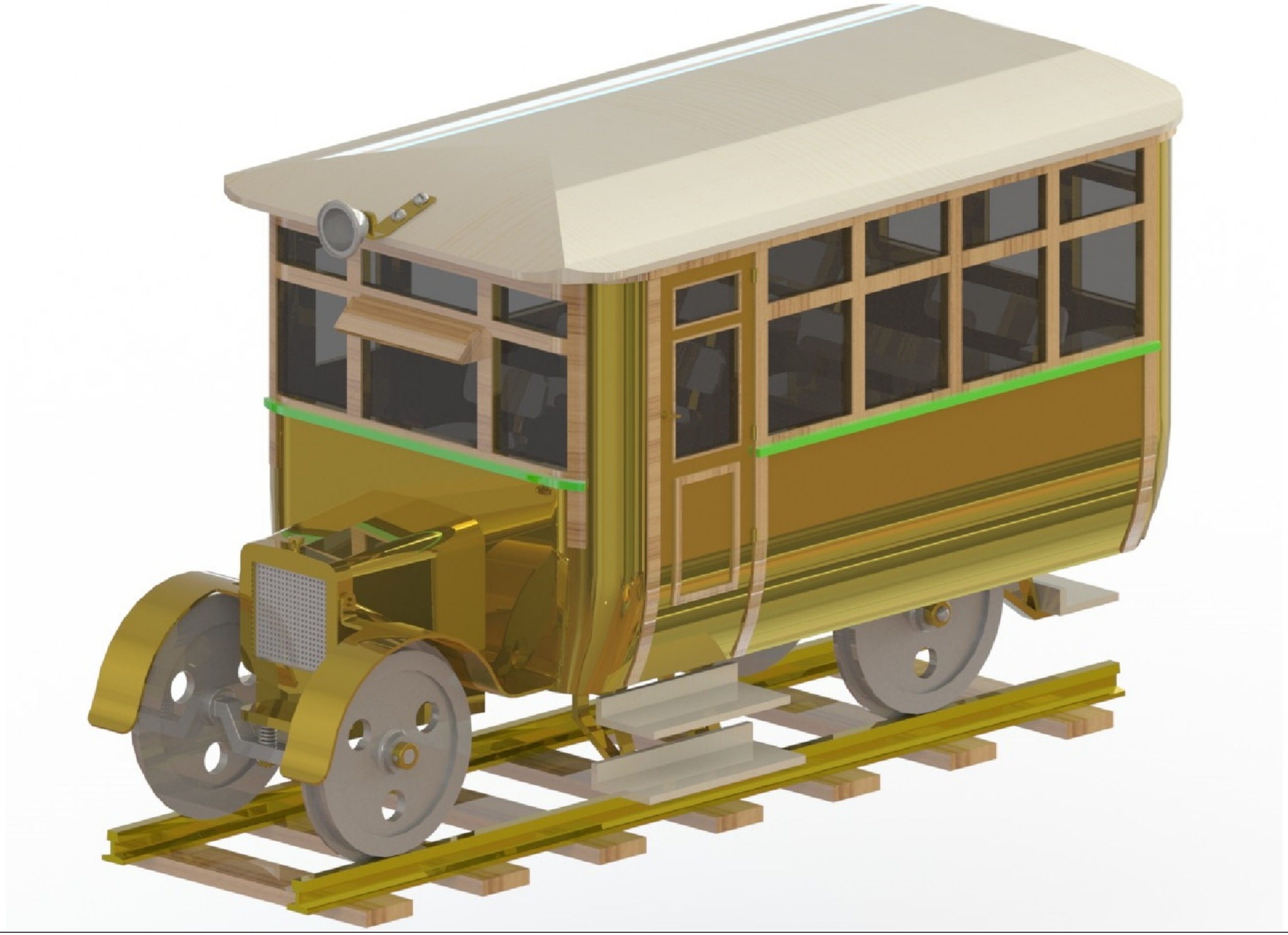

NOTES:

| TITLE | DRAWING CONTENTS | | | |
|---|---|---|---|---|
| NZR RAILCAR RM4 (MODEL T PETROL DRIVEN) | RENDERED PICTURE | PROJECT No<br>JDW DRAUGHTING SERVICES<br>J.A.M. DE WAAL. 12 BRIGHTWELL STREET PAPAKURA 2110. NEW ZEALAND. PHONE: 0064 09 2988815. MOB: 0211791000<br>E-MAIL: dewaal@xtra.co.nz. | PROJECTION<br>DATE JANUARY-2014<br>SHEET:04 OF 04 | MODEL SCALE: 1:16.8<br>DWG SCALE: 1:1 @A3 OR AS SHOWN<br>Copyright © J.A.M. DE WAAL PAPAKURA NZ<br>A3 No: RM4-04 |