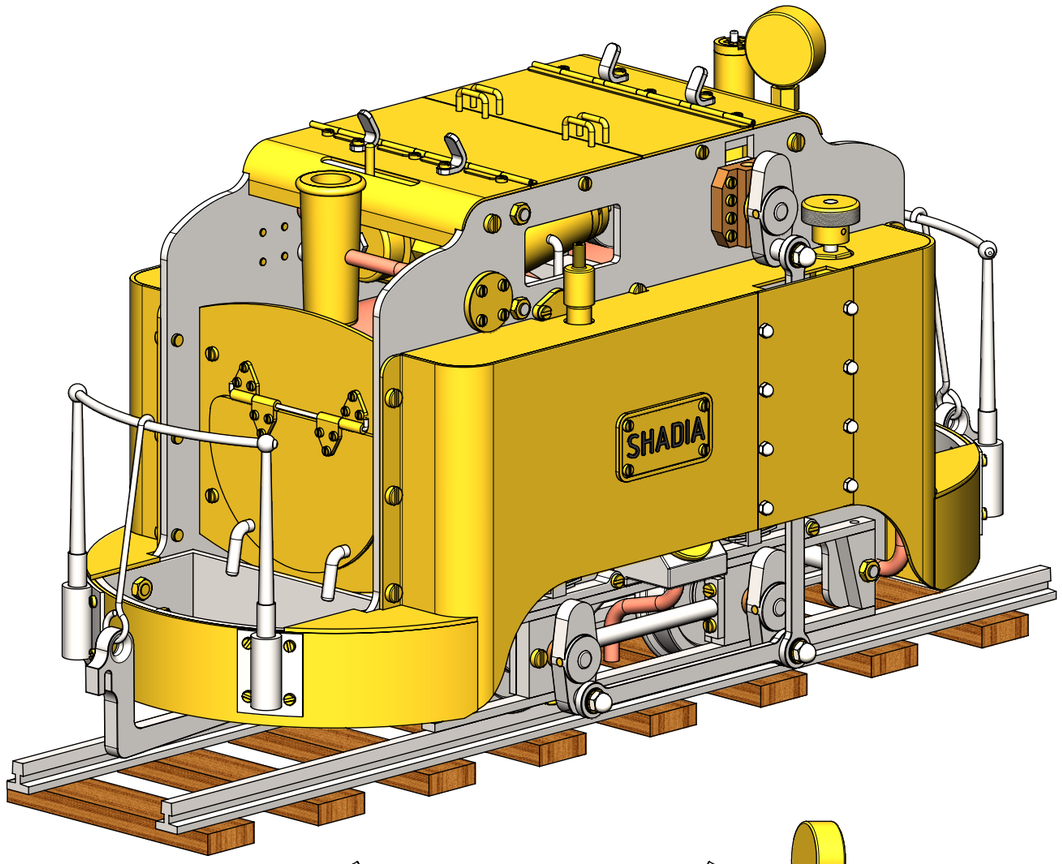

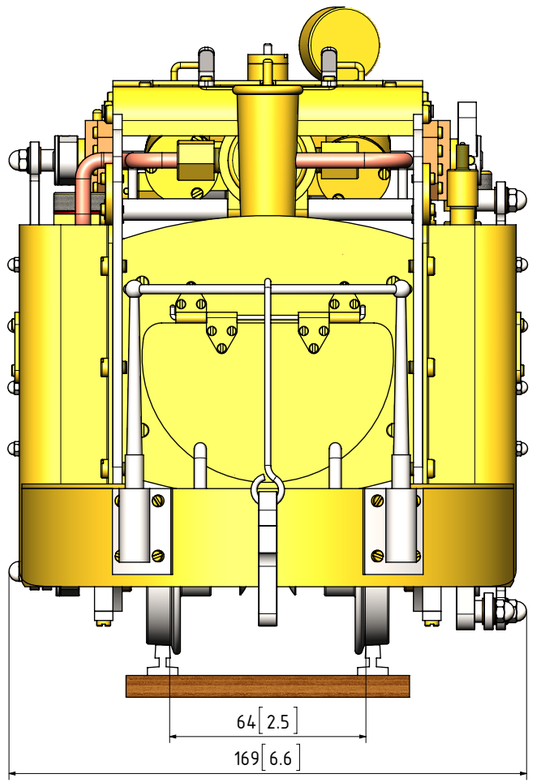

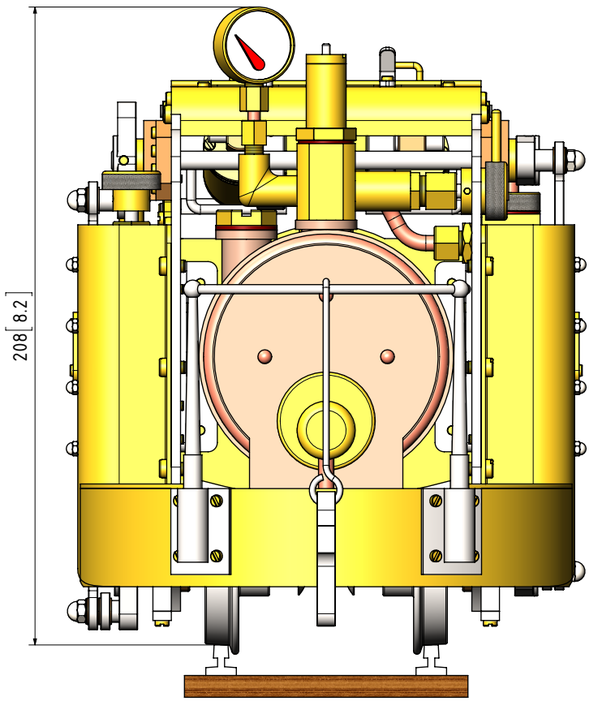

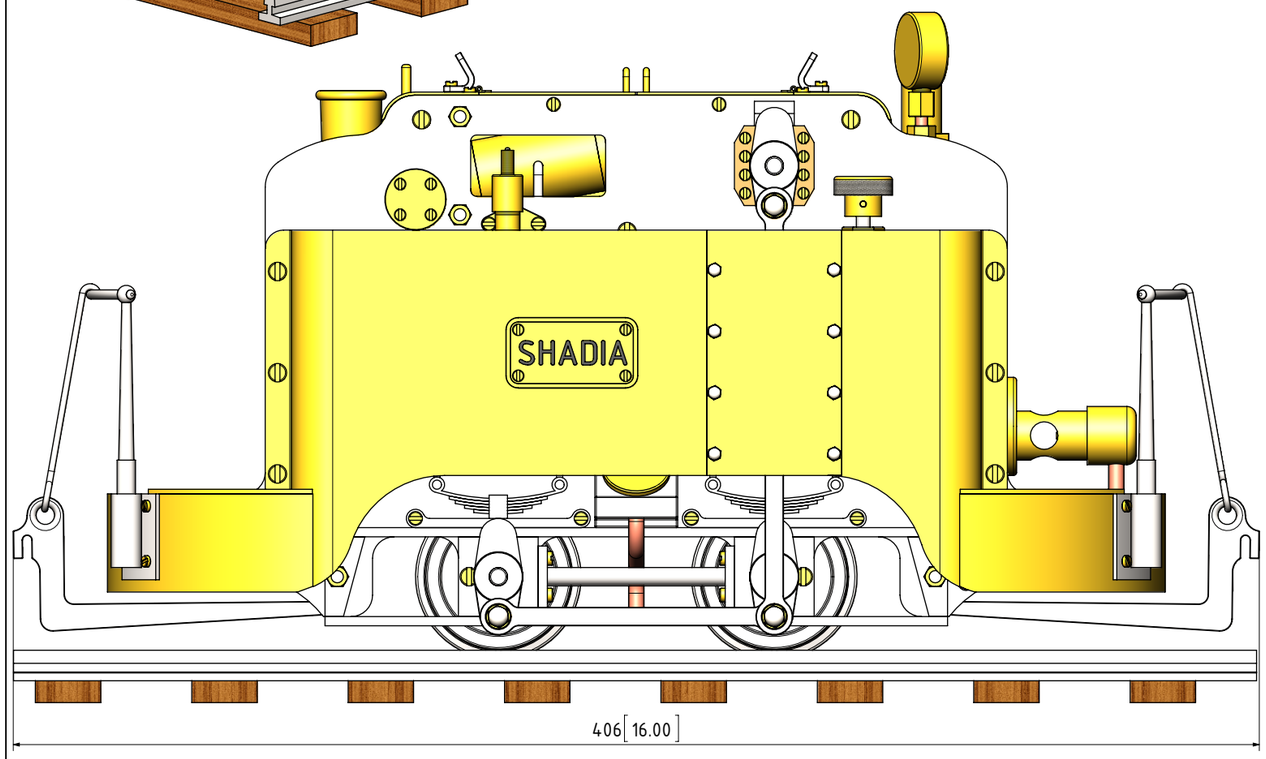

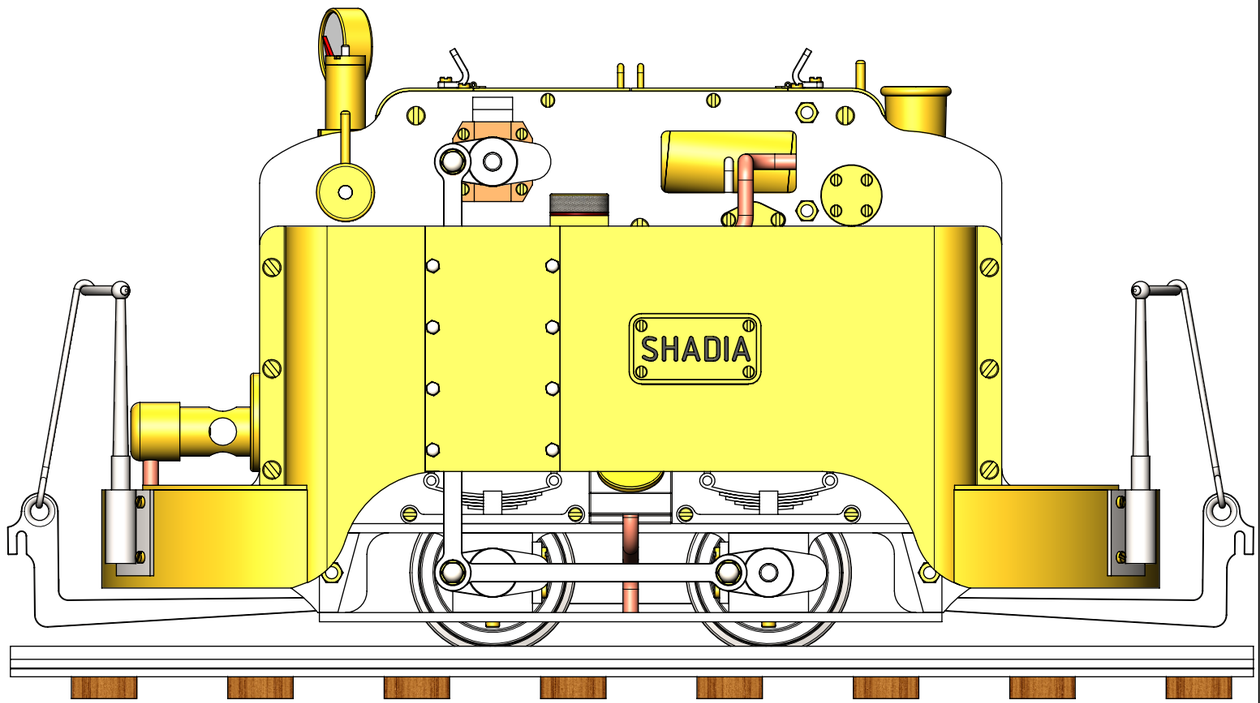

NOTES: THIS ENGINE IS LOOSLY BASED ON A SET OF DRAWINGS WHICH WERE FOUND ON THE INTERNET AND WERE TITLED "GUINNESS" THE DRAWINGS WERE BY ROBERT JOHN BATH

TITLE

SIMPLE MODEL OF A NARROW GAUGE GAS FIRED LOCO CALLED "SHADIA" (64mm/2.5")

DRAWING CONTENTS

GENERAL ARRANGEMENT AND ISOMETRIC VIEW

PROJECT No 07E-14-00

JDW DRAUGHTING SERVICES
J.A.M. DE WAAL. 12 BRIGHTWELL STREET PAPAKURA 2110. NEW ZEALAND. PHONE: 0064 09 2988815. MOB: 0211791000
E-MAIL: dewaal@xtra.co.nz.

PROJECTION JDWDS

DATE JANUARY-2017

SHEET: 01 OF 07

MODEL SCALE: 1:1

DWG SCALE: 1:1 @A3 OR AS SHOWN

Copyright © J.A.M. DE WAAL PAPAKURA NZ

A3 No: SHADIA-01

QTY.	PART NUMBER
1	SHADIA-1-01-INNER SIDE FRAME PLATE
1	SHADIA-1-01-INNER SIDE FRAME PLATE
2	SHADIA-1-02-AXLE BOX SUPPORT PLATE
2	SHADIA-1-02-AXLE BOX SUPPORT PLATE
4	SHADIA-1-03-AXLE BOX SUPPORT PLATE SPACER
4	SHADIA-1-04-AXLE BOX
2	SHADIA-1-05-AXLE BOX STRETCHER BAR
4	SHADIA-1-06-AXLE BOX STRETCHER BAR END
4	SHADIA-1-07-LEAF SPRING MOUNTING PLATE
4	SHADIA-1-08-LEAF SPRING
2	SHADIA-1-09-SAND BOX
2	SHADIA-1-10-SAND BOX COVER
2	SHADIA-1-11-SAND BOX FEED PIPE
4	SHADIA-1-12-WHEEL AXLE BEARING BUSH
2	SHADIA-1-13-DUMMY LAY SHAFT COVER
2	SHADIA-1-14-DUMMY SHAFT COVER
2	SHADIA-1-15-TOP BEARING BLOCK
1	SHADIA-1-16-FOOTWELL
1	SHADIA-1-16-FOOTWELL
2	SHADIA-1-17-FOOTWELL SKIRT
4	SHADIA-1-18-STACHION BACK PLATE
4	SHADIA-1-19-STACHION SOCKET
4	SHADIA-1-20-STACHION
2	SHADIA-1-21-STACHION HAND RAIL
1	SHADIA-1-22-PORT BLOCK REAR MOUNT SPACER
2	SHADIA-1-23-PORT BLOCK FRONT MOUNTING BAR
4	SHADIA-1-24-PORT BLOCK FRONT MOUNTING SPACER
2	SHADIA-1-25-COUPLING PLATE MOUNTING BAR
4	SHADIA-1-26-COUPLING PLATE MOUNTING SPACER
2	SHADIA-1-27-COUPLING PLATE
2	SHADIA-1-28-COUPLING RETAINING HOOK
1	SHADIA-1-29-LUBRICATOR BODY
1	SHADIA-1-30-LUBRICATOR CAP
1	SHADIA-1-31-LUBRICATOR STEAM IN-OUTLET
1	SHADIA-1-32-LUBRICATOR NUT
2	SHADIA-1-33-LUBRICATOR PIPE NUT
1	SHADIA-1-34-GAS CONTROL VALVE BRACKET
1	SHADIA-1-35-GAS CONTROL VALVE BODY
1	SHADIA-1-36-GAS CONTROL VALVE SPINDLE HOUSING
1	SHADIA-1-37-GAS CONTROL VALVE SPINDLE
1	SHADIA-1-38-GAS CONTROL VALVE SPINDLE NUT
2	SHADIA-1-39-GAS CONTROL VALVE PIPE NUT
1	SHADIA-1-40-GAS CONTROL VALVE SPINDLE HAND WHEEL
1	SHADIA-1-41-GAS CONTROL VALVE NUT
1	SHADIA-1-42-GAS TANK SHELL
2	SHADIA-1-43-GAS TANK END
1	SHADIA-1-44-GAS TANK OUTLET BUSH
1	SHADIA-1-45-GAS TANK FILLER BUSH
1	SHADIA-1-46-GAS TANK-CONTROL VALVE SUPPLY PIPE
1	SHADIA-1-47-GAS TANK FILLER VALVE HOUSING
1	SHADIA-1-48-GAS TANK FILLER VALVE
1	SHADIA-1-49-GAS TANK FILLER VALVE TOP
1	SHADIA-1-50-GAS TANK FILLER VALVE SPRING
2	SHADIA-1-51-BOILER MOUNTING BRACKET
1	SHADIA-1-52-SMOKE BOX FRONT PLATE
1	SHADIA-1-53-SMOKE DOOR
4	SHADIA-1-54-SMOKE DOOR HINGE
1	SHADIA-1-55-SMOKE BOX DOOR HINGE PIN
2	SHADIA-1-56-SMOKE BOX DOOR SCREW HANDLE
4	SHADIA-1-57-FOOT PLATE

QTY.	PART NUMBER
1	SHADIA-2-01-BOILER SHELL
1	SHADIA-2-02-BOILER END COVER
1	SHADIA-2-02-BOILER END COVER
1	SHADIA-2-03-BOILER FLUE
1	SHADIA-2-04-BACK HEAD PLATE
1	SHADIA-2-05-BOILER MANIFOLD BUSH
1	SHADIA-2-06-BOILERWATER FILLER BUSH
1	SHADIA-2-07-CHIMNEY
1	SHADIA-2-08 MANIFOLD BODY
1	SHADIA-2-09-REGULATOR VALVE BODY
1	SHADIA-2-10-REGULATOR VALVE SPINDLE HOUSING
1	SHADIA-2-11-REGULATOR VALVE SPINDLE
1	SHADIA-2-12-REGULATOR VALVE SPINDLE NUT
1	SHADIA-2-13-REGULATOR VALVE PIPE NUT
1	SHADIA-2-14-REGULATOR VALVE SPINDLE HAND WHEEL
1	SHADIA-2-15-REGULATOR STEAM SUPPLY PIPE
1	SHADIA-2-16-SAFETY VALVE BOTTOM BODY
1	SHADIA-2-17-SAFETY VALVE LOCKING RING
1	SHADIA-2-18-SAFETY VALVE BALL VALVE
1	SHADIA-2-19-SAFETY VALVE STEM
1	SHADIA-2-20-SAFETY VALVE STEM SPRING

QTY.	PART NUMBER
1	SHADIA-2-21-SAFETY VALVE PRESSURE SCREW
1	SHADIA-2-22-PRESSURE GAUGE CONNECTOR
1	SHADIA-2-23-PRESSURE GAUGE
1	SHADIA-2-24-PRESSURE GAUGE PIPE
2	SHADIA-2-25-PRESSURE GAUGE PIPE NUT
1	SHADIA-2-26-WATER FILLER CAP
1	SHADIA-2-27-BURNER FLUE FLANGE
1	SHADIA-2-28-BURNER MIXING TUBE
1	SHADIA-2-29-BURNER FLAME TUBE
1	SHADIA-2-30-BURNER JET HOLDER
1	SHADIA-2-31-BURNER JET
1	SHADIA-2-32-GAS SUPPLY PIPE

QTY.	PART NUMBER
1	SHADIA-3-01-PORT BLOCK
1	SHADIA-3-02-PORT BLOCK BEARING BLOCK
1	SHADIA-3-03-REVERSING VALVE BASE BLOCK
1	SHADIA-3-04-REVERSING VALVE
1	SHADIA-3-05-REVERSING VALVE PIVOT AXLE
1	SHADIA-3-06-REVERSING VALVEPRESSURE SPRING
2	SHADIA-3-07-REVESING VALVE PIPE SCREW NIPPLE
2	SHADIA-3-08-REVERSING VALVE PIPE NUT
1	SHADIA-3-09-STEAM SUPPLY PIPE
1	SHADIA-3-10-STEAM EXHAUST PIPE
1	SHADIA-3-11-CYLINDER PIVOT SHAFT
2	SHADIA-3-12-CYLINDER
2	SHADIA-3-13-CYLINDER PORT PLATE
2	SHADIA-3-14-CYINDER TOP COVER
2	SHADIA-3-15-CYINDER BOTTOM COVER
2	SHADIA-3-16-CYINDER PISTON ROD GLAND
1	SHADIA-3-17-CYLINDER HOLDING SPRING
1	SHADIA-3-18-CRANKSHAFT
2	SHADIA-3-19-CRANK DISC
1	SHADIA-3-20-CRANKSHAFT GEAR WHEEL
2	SHADIA-3-21-PISTON+ROD+BIG END
1	SHADIA-3-22-COUNTERSHAFT
6	SHADIA-3-23-COUNTERSHAFT+AXLE CRANK PLATE
2	SHADIA-3-24-COUNTERSHAFT CRANK PIN
2	SHADIA-3-25-COUNTERSHAFT SPACER
1	SHADIA-3-26-COUNTERSHAFT GEAR WHEEL
2	SHADIA-3-27-WHEEL AXLE
4	SHADIA-3-28-WHEEL
2	SHADIA-3-29-FRONT WHEEL CRANK PIN
2	SHADIA-3-30-REAR WHEEL CRANK PIN
2	SHADIA-3-31-WHEEL AXLE COUPLING ROD
2	SHADIA-3-32-COUNTERSHAFT COUPLING ROD
1	SHADIA-4-01-LH-RH-SIDE COVER PLATE

QTY.	PART NUMBER
1	SHADIA-4-01-LH-RH-SIDE COVER PLATE
1	SHADIA-4-02-LH-TOP COVER
1	SHADIA-4-03-RH-TOP COVER
1	SHADIA-4-04-TOP COVER MOUNTING FRAME
1	SHADIA-4-05-FRONT TOP COVER PLATE
1	SHADIA-4-06-REAR TOP COVER PLATE
2	SHADIA-4-07-TOP DOOR PLATE
4	SHADIA-4-08-TOP DOOR HANDLE
8	SHADIA-4-09-PIANO HINGE PART-1
2	SHADIA-4-10-PIANO HINGE PART-2
4	SHADIA-4-11-TOP DOOR PLATE STOP
2	SHADIA-4-12-NAME PLATE

QTY.	PART NUMBER
1	SHADIA-64mm-RAIL
16	SHADIA-M2.5 DOME NUT
12	SHADIA-M2.5 NUT
30	SHADIA-M2.5x4 PAN HEAD SCREW
28	SHADIA-M2.5x6 PAN HEAD SCREW
16	SHADIA-M2.5x8 PAN HEAD SCREW
12	SHADIA-M2.5x10 PAN HEAD SCREW
6	SHADIA-M2x3 PAN HEAD SCREW
6	SHADIA-M2x6 PAN HEAD SCREW
16	SHADIA-M3x6 PAN HEAD SCREW
2	SHADIA-M3x8 PAN HEAD SCREW
34	SHADIA-M3x10 PAN HEAD SCREW
2	SHADIA-M3x20 C-SINK SCREW
6	SHADIA-M4 DOME NUT
22	SHADIA-M4 NUT
6	SHADIA-M4 WASHER
16	SHADIA-M4x6 PAN HEAD SCREW
12	SHADIA-M4x9 PAN HEAD SCREW
12	SHADIA-M4x10 PAN HEAD SCREW
2	SHADIA-M4x34 C-SINK SCREW - Copy
3	SHADIA-R2x5-ROUND HEAD RIVET

NOTES:
0. ALL DRAWINGS ARE IN METRIC MEASUREMENTS
1. ALL ENGINEERING PRACTICES SHALL BE APPLIED WITH REGARDS TO HOLE AND SHAFT TOLERANCES.
2. WHERE SCREWS OR BOLTS ARE USED THE CLEARANCE HOLES SHALL BE APPROXIMATELY 5% TO 8% LARGER THAN THE MATCHING TAPPED HOLE.
3. PREFERABLY ALL TAPPED HOLES AND MATCHING SCREWS AND/OR BOLTS TO BE METRIC FINE (MF)
4. MATERIALS SPECIFIED ON THE DRAWINGS ARE INDICATIVE ONLY. THE BUILDER CAN MAKE HIS/HER OWN MATERIAL CHOICE.
5. ALL CONNECTIONS/JOINTS WHICH HAVE STEAM PRESSURE APPLIED TO IT SHALL BE SILVER/HARD SOLDERED.
6. COMPRESSION SPRINGS ARE DRAWN IN COMPRESSED STATE (CP), UNCOMPRESSED STATE IS APPROX 40% TO 60% LONGER THEN COMPRESSED STATE.
7. WHERE PREFERRED SCREW OR RIVETED CONNECTIONS CAN BE OMITTED AND PARTS CAN BE BONDED TOGETHER BY USING EITHER HIGH STRENGTH GLUE, EPOXY RESIN, OR SOLDER.
8. PARTS WHICH ARE DIRECTLY EXPOSED TO STEAM AND/OR WATER SHOULD BE CONSTRUCTED USING NON-FERROUS OR NON CORROSIVE MATERIAL SUCH AS BRASS, BRONZE, GUNMETAL, STAINLESS STEEL, COPPER OR MONEL.
9. THE ORDER IN WHICH THE PARTS/COMPONENTS ARE MANUFACTURED AND THE MODEL IS ASSEMBLED IS ENTIRELY LEFT TO THE BUILDER/MODEL MAKER.
10. A COLOUR SCHEME FOR THIS PROJECT IS ENTIRELY LEFT UP TO THE MODEL MAKER.
11. THE MANNER IN WHICH THE PARTS/COMPONENTS ARE MANUFACTURED IS ENTIRELY LEFT UP TO THE BUILDER.
12. USE LOCTITE, ON SCREW OR PRESS FIT CONNECTIONS OR SURFACES, WERE DEEMED NECESSARY TO PREVENT PARTS FROM LOOSENING.
13. WASHER SHALL BE USED WHERE DEEMED NECESSARY.
14. INQUIRE AT THE APPROPRIATE AUTHORITIES WHETHER OR NOT THIS BOILER REQUIRES A PRESSURE TEST CERTIFICATE
XX. ERRORS AND/OR OMISSIONS MAY OCCUR IN THE DRAWINGS, DO NOT HESITATE TO CONTACT ME SO THAT THE ERRORS/OMISSIONS CAN BE RECTIFIED.

MATERIAL ABBREVIATIONS:
ALU = ALUMINIUM
BRS = BRASS
BRZ = BRONZE OR GUNMETAL (BRZ/GM)
PBRZ= PHOSPHOR BRONZE
CI = CAST IRON
CU = COPPER
GRA = GRAPHITE
MS = MILD STEEL/BRIGHT MILD STEEL
S/S = SILVER STEEL OR STAINLESS STEEL
SPS = SPRING STEEL
PEEK= POLYETHER ETHER KETONE
SYN = SYNTHETIC MATERIAL SUCH AS VETON, NYLON, TEFLON OR RUBBER
IN GENERAL SYNTHETIC MATERIALS SOULD BE ABLE TO WITHSTAND THE HEAT AND PRESSURE(S) APPLIED TO THEM.
nnn/nnn MEANS THAT EITHER MATERIAL CAN BE USED

OTHER ABBREVIATIONS
DP = DEEP
DAA= DRILL AFTER ASSEMBLY
D&TAA= DRILL AND TAP AFTER ASSEMBLY
CF = CLOSE FIT (SIZE FOR SIZE)
PF = PRESS FIT
PFAA= PRESS FIT AFTER ASSEMBLY
PCD = PITCH CIRCLE DIAMETER
RM = REAM
HEX = HEXAGON, 6SIDED
CP = COMPRESSED
KNL = KNURLED
CSK = COUNTERSINK
PL = PLACES
DWL= DOWEL
(T)HESOP=(TAPPED)HOLES EQUALLY SPACED ON PCD
(T)HESOC=(TAPPED)HOLES EQUALLY SPACED ON CIRCUMFERENCE
SA-n-xxx = SUB ASSEMBLY-n-xxx

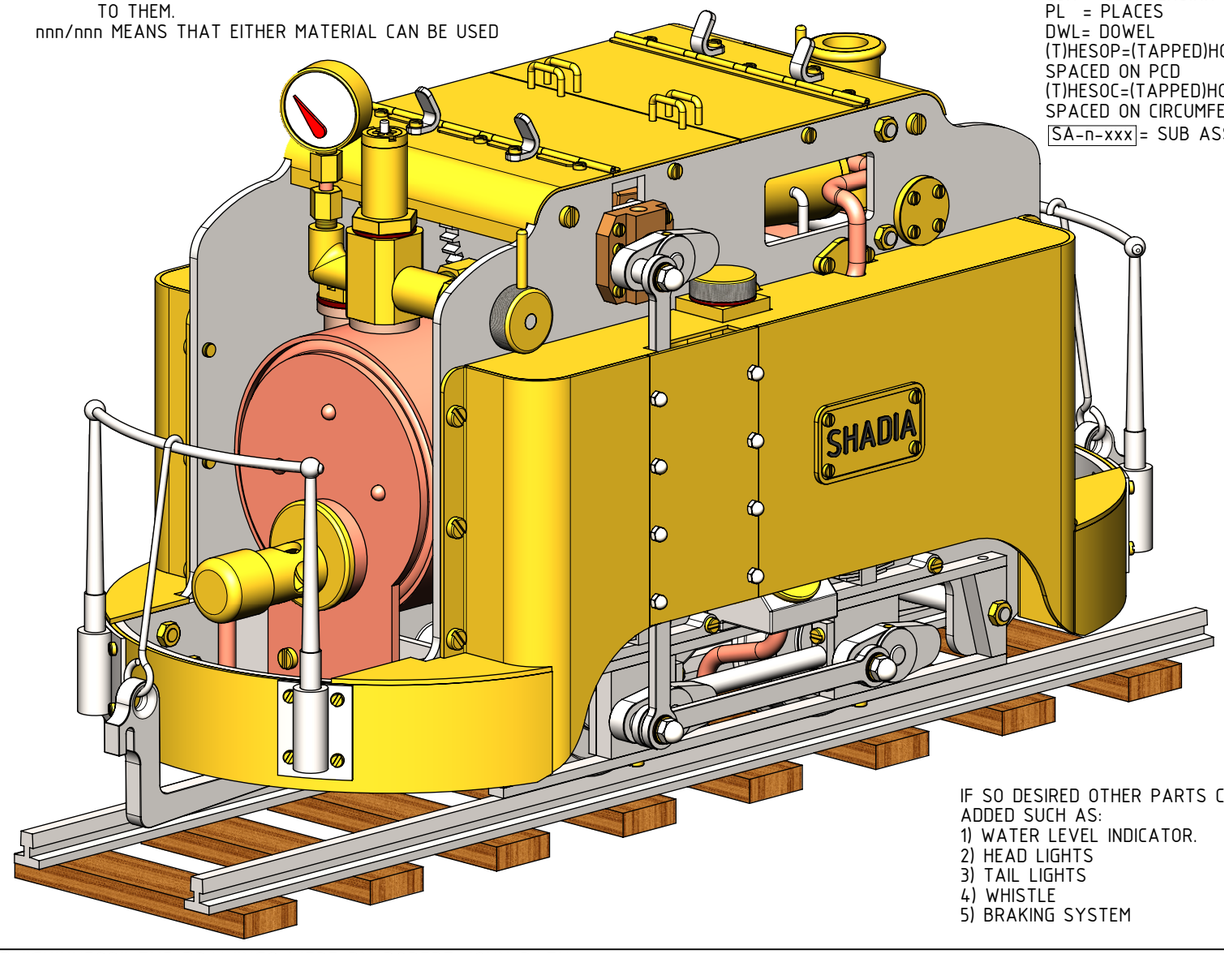

IF SO DESIRED OTHER PARTS CAN BE ADDED SUCH AS:
1) WATER LEVEL INDICATOR.
2) HEAD LIGHTS
3) TAIL LIGHTS
4) WHISTLE
5) BRAKING SYSTEM

NOTES: THIS ENGINE IS LOOSLY BASED ON A SET OF DRAWINGS WHICH WERE FOUND ON THE INTERNET AND WERE TITLED "GUINNESS" THE DRAWINGS WERE BY ROBERT JOHN BATH

TITLE
SIMPLE MODEL OF A NARROW GAUGE GAS FIRED LOCO CALLED "SHADIA" (64mm/2.5")

DRAWING CONTENTS
ISOMETRIC VIEW BILL OF MATERIAL AND NOTES

PROJECT No 07E-14-00
JDW DRAUGHTING SERVICES
J.A.M. DE WAAL. 12 BRIGHTWELL STREET PAPAKURA 2110. NEW ZEALAND. PHONE: 0064 09 2988815. MOB: 0211791000
E-MAIL: dewaal@xtra.co.nz.

PROJECTION JDWDS
DATE JANUARY-2017
SHEET: 02 OF 07

MODEL SCALE: 1:1
DWG SCALE: 1:1 @A3 OR AS SHOWN
Copyright © J.A.M. DE WAAL PAPAKURA NZ
A3 No: SHADIA-02

LEFT HAND PLATE

A = M2.5
B = ∅3
C = M3
D = ∅4
E = M4

3mm THICK SCALE 1:2

RIGHT HAND PLATE

FOR ALL, OTHER DIMENSION DETAILS REFER TO 1-01/L

3mm THICK SCALE 1:2

SCALE 1:1.5

SCALE 1:1.5

SCALE 1:1.5

SCALE 1:2

SCALE 1:2

SCALE 1:2

SCALE 1:2

SCALE 1:2

SCALE 1:2

SCALE 1:2

SCALE 1:2

SCALE 1:2.5

SCALE 1:2.5

SCALE 1:2

SCALE 1:2

SCALE 1:2

SCALE 1:2

SCALE 1:2

SCALE 1:2

SCALE 1:2

SCALE 1:2

SCALE 1:2

FOLD UP
FOLD LINES
2mm THICK SCALE 1:2
FLAT PATTERN
TUBE 5x4
CU
SCALE 1:2
BRS
SOLDER
SCALE 1:2
ANGLE 12x12x2
BRZ
SCALE 1:1.5
MS
S/S
O-RING SEAL
SCALE 1:1.5
SECTION B-B
SCALE 1 : 1.5
SYN
12 COILS
SCALE 1:1.5
3THESOP
M2-6PL
2mm THICK SCALE 1:2
SA-1-101
SA-1-104
SA-1-107
SA-1-110
REFER TO SA-1-105
SA-1-108
SA-1-112
SA-1-111
SA-1-105
SA-1-103
SA-1-115
SA-1-102
SA-1-109
SCALE 1:3
BOTTOM ONLY
SCALE 1:3
TUBE 30x27
SCALE 1:3
SCALE 1:1.5

NOTES: THIS ENGINE IS LOOSLY BASED ON A SET OF DRAWINGS WHICH WERE FOUND ON THE INTERNET AND WERE TITLED "GUINNESS" THE DRAWINGS WERE BY ROBERT JOHN BATH

TITLE
SIMPLE MODEL OF A NARROW GAUGE GAS FIRED LOCO CALLED "SHADIA" (64mm/2.5")

DRAWING CONTENTS
PARTS AND ASSEMBLIES

PROJECT No 07E-14-00

JDW DRAUGHTING SERVICES
J.A.M. DE WAAL. 12 BRIGHTWELL STREET PAPAKURA 2110. NEW ZEALAND. PHONE: 0064 09 2988815. MOB: 0211791000
E-MAIL: dewaal@xtra.co.nz.

PROJECTION JDWDS
DATE JANUARY-2017
SHEET: 04 OF 07

MODEL SCALE: 1:1
DWG SCALE: 1:1 @A3 OR AS SHOWN
Copyright © J.A.M. DE WAAL PAPAKURA NZ
A3 No: SHADIA-04

SA-2-206

SA-2-209

SA-2-210

SA-2-201

SA-2-202

SA-2-204

SA-2-205

SOME HIDDEN LINES OMITTED FOR CLARITY

NOTES: THIS ENGINE IS LOOSLY BASED ON A SET OF DRAWINGS WHICH WERE FOUND ON THE INTERNET AND WERE TITLED "GUINNESS" THE DRAWINGS WERE BY ROBERT JOHN BATH

TITLE

SIMPLE MODEL OF A NARROW GAUGE GAS FIRED LOCO CALLED "SHADIA" (64mm/2.5")

DRAWING CONTENTS

PARTS AND ASSEMBLIES

JDW DRAUGHTING SERVICES
J.A.M. DE WAAL. 12 BRIGHTWELL STREET PAPAKURA 2110. NEW ZEALAND. PHONE: 0064 09 2988815. MOB: 0211791000
E-MAIL: dewaal@xtra.co.nz.

PROJECT No 07E-14-00

PROJECTION JDWDS

DATE JANUARY-2017

MODEL SCALE: 1:1

DWG SCALE: 1:1 @A3 OR AS SHOWN

Copyright © J.A.M. DE WAAL PAPAKURA NZ

SHEET: 05 OF 07 | A3 | No: SHADIA-05

SCALE 1:1.5

33 TEETH
TEETH TO HAVE THE SAME PROFILE AS 3-20
SCALE 1:2

SECTION A-A
SCALE 1 : 1.5

SCALE 1:1.5

REFER TO 3-31 FOR ALL OTHER DIMENSION DETAILS
SCALE 1:1.5

SCALE 1:2.5

MAKE THIS DOOR SEPARATE

SCALE 1:2.5

SCALE 1:2.5

REFER TO 4-05 FOR ALL DIMENSION DETAILS
SCALE 1:2

SCALE 1:2

1mm THICK SCALE 1:3

SCALE 1:2

SCALE 1:1.5

SCALE 1:2

SA-3-310

SA-3-301

SA-3-306

SA-3-302

SA-3-305

SA-3-303

SA-3-304

SA-4-403

SA-4-402

SA-4-401

SA-4-404

NOTES: THIS ENGINE IS LOOSELY BASED ON A SET OF DRAWINGS WHICH WERE FOUND ON THE INTERNET AND WERE TITLED "GUINNESS" THE DRAWINGS WERE BY ROBERT JOHN BATH

TITLE
SIMPLE MODEL OF A NARROW GAUGE GAS FIRED LOCO CALLED "SHADIA" (64mm/2.5")

DRAWING CONTENTS
PARTS AND ASSEMBLIES

PROJECT No 07E-14-00
JDW DRAUGHTING SERVICES
J.A.M. DE WAAL. 12 BRIGHTWELL STREET PAPAKURA 2110. NEW ZEALAND. PHONE: 0064 09 2988815. MOB: 0211791000
E-MAIL: dewaal@xtra.co.nz.

PROJECTION JDWDS
DATE JANUARY-2017

MODEL SCALE: 1:1
DWG SCALE: 1:1 @A3 OR AS SHOWN
Copyright © J.A.M. DE WAAL PAPAKURA NZ
SHEET: 06 OF 07 | A3 | No: SHADIA-06

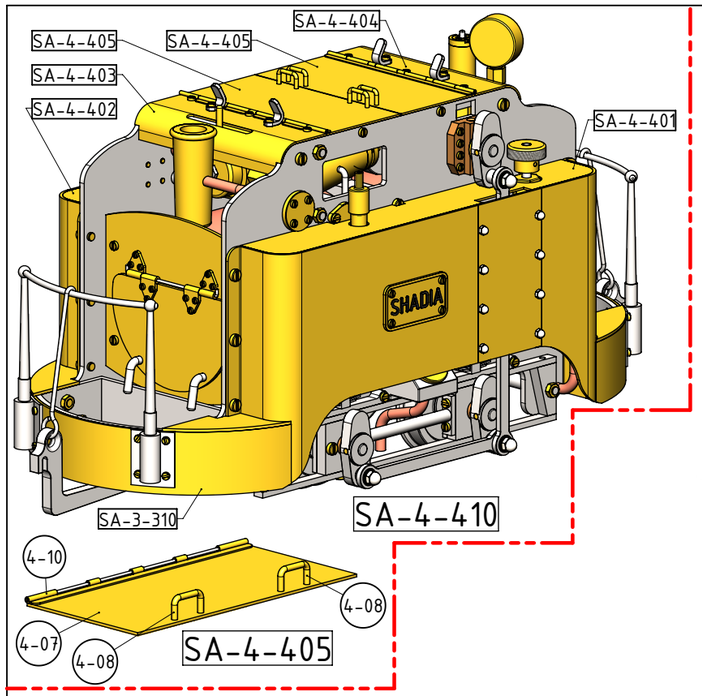

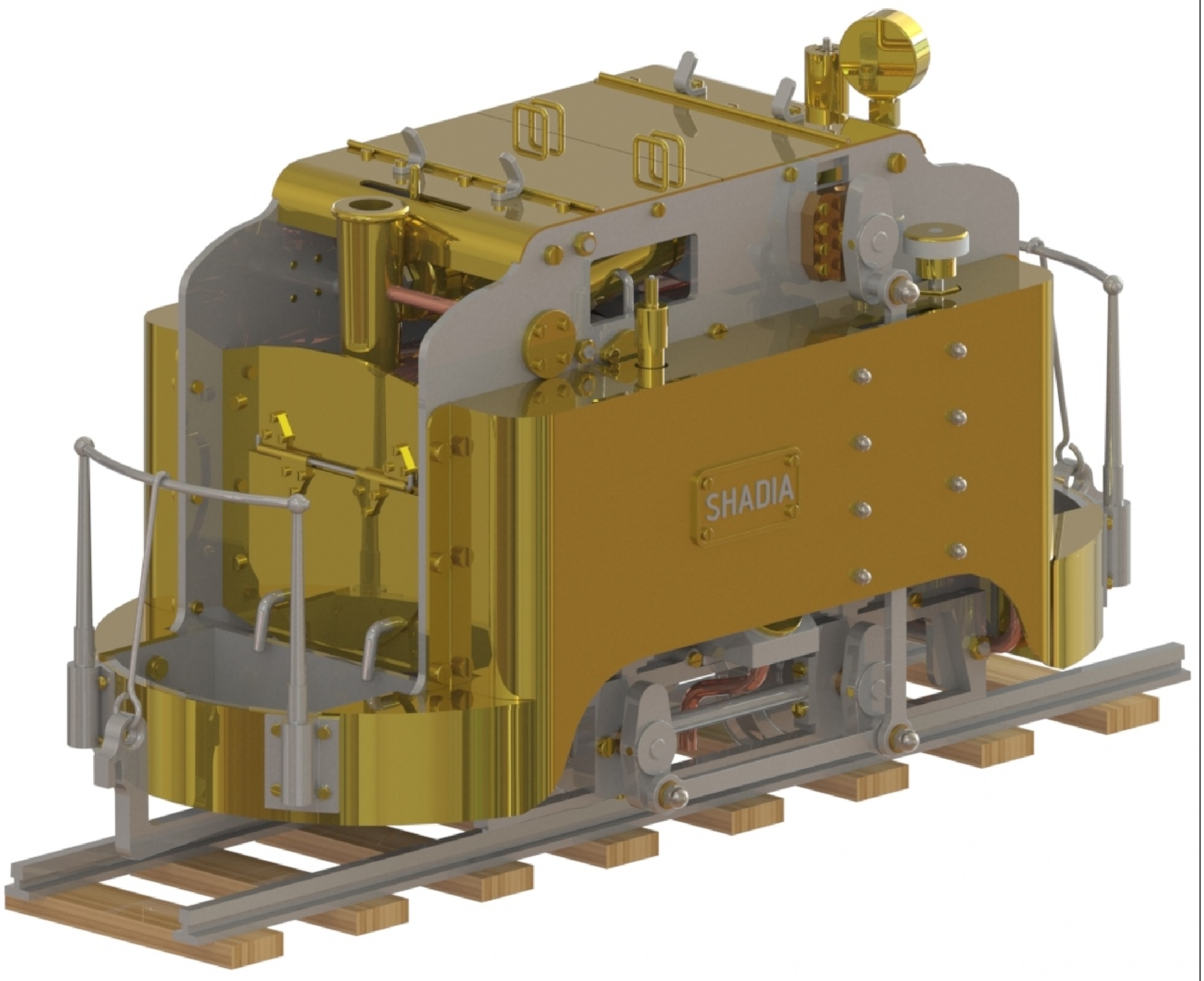

NOTES: THIS ENGINE IS LOOSLY BASED ON A SET OF DRAWINGS WHICH WERE FOUND ON THE INTERNET AND WERE TITLED "GUINNESS" THE DRAWINGS WERE BY ROBERT JOHN BATH

TITLE
SIMPLE MODEL OF A NARROW GAUGE GAS FIRED LOCO CALLED "SHADIA" (64mm/2.5")

DRAWING CONTENTS
ASSEMBLIES AND RENDERED PICTURE

PROJECT No 07E-14-00

JDW DRAUGHTING SERVICES
J.A.M. DE WAAL. 12 BRIGHTWELL STREET PAPAKURA 2110. NEW ZEALAND. PHONE: 0064 09 2988815. MOB: 0211791000
E-MAIL: dewaal@xtra.co.nz.

PROJECTION JDWDS

DATE JANUARY-2017

SHEET: 07 OF 07

MODEL SCALE: 1:1

DWG SCALE: 1:1 @A3 OR AS SHOWN

Copyright © J.A.M. DE WAAL PAPAKURA NZ

A3 No: SHADIA-07